Sustainability **2013**, *5*, 3802-3818; doi:10.3390/su5093802

OPEN ACCESS

sustainability

ISSN 2071-1050

www.mdpi.com/journal/sustainability

Article

Harmonization between a Framework of Multilateral Approaches to Nuclear Fuel Cycle Facilities and Bilateral Nuclear Cooperation Agreements

Makiko Tazaki * and Yusuke Kuno

Nuclear Non-Proliferation Research Laboratory, Department of Nuclear Engineering and Management, School of Engineering, The University of Tokyo, 2-11-16, Yayoi, Bunkyo-ku, Tokyo 113-8656, Japan; E-Mail: kuno.yusuke@n.t.u-tokyo.ac.jp

* Author to whom correspondence should be addressed; E-Mail: tazaki@n.t.u-tokyo.ac.jp; Tel.: +81-29-284-3951; Fax: +81-29-284-3678.

Received: 12 July 2013; in revised form: 27 August 2013 / Accepted: 28 August 2013 / Published: 5 September 2013

Abstract: One of primary challenges for ensuring effective and efficient functions of the multilateral nuclear approaches (MNA) to nuclear fuel cycle facilities is harmonization between a MNA framework and existing nuclear cooperation agreements (NCA). A method to achieve such harmonization is to construct a MNA framework with robust non-proliferation characteristics, in order to obtain supplier states', especially the US's prior consents for non-supplier states' certain activities including spent fuel reprocessing, plutonium storages and retransfers of plutonium originated in NCAs. Such robust characteristics can be accomplished by MNA member states' compliances with International Atomic Energy Agency (IAEA) Safeguards, regional safeguards agreements, international conventions, guidelines and recommendations on nuclear non-proliferation, nuclear security, safety, and export control. Those provisions are to be incorporated into an MNA founding agreement, as requirements to be MNA members in relation to NCAs. Furthermore, if an MNA facility is, (1) owned and operated jointly by all MNA member states, (2) able to conclude bilateral NCAs with non-MNA/supplier states as a single legal entity representing its all member states like an international organization, and (3) able to obtain necessary prior consents, stable, smooth, and timely supplies of nuclear fuel and services can be assured among MNA member states. In this paper, the authors will set out a general MNA framework and then apply it to a specific example of Europe Atomic Energy Community (EURATOM) and then consider its applicability to the Asian region, where an establishment of an MNA framework is expected to be explored.

Keywords: Multilateral Nuclear Approach; MNA; harmonization; bilateral nuclear cooperation agreements

1. Introduction

There is no specific definition of a multilateral nuclear approaches (MNA) framework, but it is commonly understood that a number of states' and/or business enterprises' engagements in civilian nuclear activities and facilities, including enrichment and reprocessing (ENR) facilities, and plutonium (MOX fuel) and spent fuel storage. It aims to promote sustainability of nuclear energy utilization, while enhancing world nuclear non-proliferation. Participations in the MNA framework is voluntary and MNA members' engagements vary, including investment, ownership, control, management, and operation of nuclear fuel cycle facilities.

Current MNA frameworks can be generally typified by Eurodif and URENCO. In the case of Eurodif, a French operator, exclusively holds enrichment technology, is responsible for facility operations and dominates decision making, although the facility itself is invested in by several states (hereafter referred to as a MNA "Type I" facility). On the other hand, in the case of URENCO, Germany, the Netherlands, and the UK equally share facilities' ownership, operation, and decision-making in the company (hereafter referred to as a MNA "Type II" facility).

As for the supplying of nuclear material, technologies, and equipment and facilities, supplier states and non-supplier (recipient) states generally use nuclear cooperation agreements (NCAs) bilaterally and the former require the latter to satisfy certain nuclear non-proliferation conditions under the NCAs. Especially in following cases, the former generally requires the latter to obtain the former's prior consent:

- Reprocessing of spent fuel produced through utilization of supplied material under NCAs;
- Storage of plutonium and highly enriched uranium (HEU) produced through utilization of supplied material under NCAs;
- Alternation in form or content of plutonium, HEU, and irradiated material produced through utilization of supplied materials under NCAs;
- Retransfer of plutonium produced through utilization of supplied materials under NCAs.

In case of an MNA framework consisting of states, having already utilized nuclear material and equipment supplied under the NCAs, stable, and smooth and timely supplies of nuclear material and services among MNA member states are to be prevented, even if one MNA member state fails to obtain necessary prior consents or programmatic advanced consents from supplier states. This explains why harmonization between an MNA framework and existing NCAs is necessary.

In the authors' previous paper, as the first step for establishing an MNA framework, twelve necessary features of MNA are delineated [1]. As the second step, we, here, focus on harmonization between an MNA framework and NCAs, as one of the most crucial and challenging issues among the "legal aspects" of MNA, which is one of the MNA's twelve features. There have been no such analyses, nor proposals, on this issue in earlier MNA studies. This paper, together with the authors' first paper, is expected to be a significant reference for establishing an MNA framework in the immediate future.

2. Current Status of NCAs and Non-Proliferation Conditions

2.1. Current Status of NCAs

Table 1 shows the current status on NCAs between major nuclear supplier states (USA, Russia, UK, France, Canada, Austria, EURATOM, and Kazakhstan) and several supplier and/or non-supplier states in the Asian region (Japan, Republic of Korea (ROK), China, Indonesia, and Vietnam), where either introductions or utilization of nuclear energy are expected to be enhanced.

Table 1. Nuclear cooperation agreements (NCAs) between major nuclear supplier states and several states in the Asian region.

	USA	RUS	UK	FRA	CAN	AUS	EUR	KAZ	JPN	ROK	CHN	IDN	VNM
USA		✓	*	*	✓	✓	✓	✓	✓	✓	✓	✓	***
Russia (RUS)	✓		✓	✓	✓	✓	✓	✓	✓	✓	✓	✓	✓
UK	*	✓		✓	**	✓	—		✓	✓	✓	✓	
France (FRA)	*	✓	✓		**	✓	—	✓	✓	✓	✓	✓	✓
Canada (CAN)	✓	✓	**	**		✓	✓	✓	✓	✓	✓	✓	✓
Australia (AUS)	✓	✓	✓	✓	✓		✓	✓	✓	✓	✓	✓	
EURATOM (EUR)	✓	✓	—	—	✓	✓		✓	✓		✓		
Kazakhstan (KAZ)	✓	✓		**	✓	✓	✓		✓	✓	**	**	
Japan (JPN)	✓	✓	✓	✓	✓	✓	✓	✓		✓	✓	✓	✓
ROK	✓	✓	✓	✓	✓	✓		✓	✓		✓	✓	✓
China (CHN)	✓	✓	✓	✓	✓	✓	✓	**	✓	✓		✓	
Indonesia (IDN)	✓	✓	✓	✓	✓	**		**	✓	✓	✓		
Vietnam (VNM)	***	✓		✓	✓				✓	✓			

(1) ✓: Conclusions of NCAs;

(2) *: The NCA between the USA and EURATOM includes its members Australia, Belgium, Bulgaria, Cyprus, the Czech Republic, Denmark, Estonia, Finland, France, Germany, Greece, Hungary, Ireland, Italy, Latvia, Lithuania, Luxembourg, Malta, the Netherlands, Poland, Portugal, Romania, Slovakia, Slovenia, Spain, Sweden and the UK;

(3) **: An agreement of cooperation in specific area such as safety or science and technology;

(4) ***: Memorandum of agreement.

As shown in the Table 1, world nuclear supplier states and above-mentioned states in the Asian region have already concluded NCAs with each other. Especially states like ROK, Indonesia, and Vietnam, which have neither natural uranium nor enrichment capabilities, and have no choice but to acquire nuclear fuel through NCAs with enricher states, in order to initiate and/or maintain their nuclear reactor operations. Japan has an enrichment capacity, but it does not have enough capability to satisfy its all demand and, therefore, it purchases natural uranium and enriched uranium under NCAs with the US, Canada, Australia, Kazakhstan, and states in the Europe Atomic Energy Community (EURATOM). The EURATOM, as a single legal entity representing its 28 member states within the European Union (EU), concludes NCAs with other non-EU states and each EURATOM member state does not have to conclude bilaterally with non-EU states.

Assuming the establishment of an MNA in the Asian regions, therefore, harmonization between an MNA framework and existing NCAs is imperative.

2.2. Nuclear Non-Proliferation Conditions under the NCAs

Currently, there are a variety of NCAs and nuclear non-proliferation conditions within NCAs vary according to both supplier and non-supplier states' nuclear non-proliferation policies. Table 2 shows comparisons of requirements under NCAs between Japan and major nuclear supplier states.

According to Table 2, following maximum common key factors of NCAs can be found for the purpose of ensuring non-proliferation:

- Safeguards: If recipients are non-weapon states, supplier states require from them an application of IAEA comprehensive safeguards to their nuclear activities, as an obligation under the Treaty on the Non-Proliferation of Nuclear Weapon (NPT).
- Re-transfer: Supplier states' prior consent is required for re-transfer of supplied material and fissile material (plutonium) produced through utilization of such supplies to authorized persons beyond the territorial jurisdiction of recipient states.
- Enrichment and reprocessing (ENR): Major uranium producers of Canada, Australia, and the US require prior consent for uranium enrichment over 20% and reprocessing. [The same provision was stipulated in previous revision of the NSG Guidelines (Paragraph 7, INFCIRC/254/Rev.9/Part 1)] [2].
- Storage of plutonium, uranium-233, and HEU: Canada and the US require prior consent for the storage of plutonium, uranium-233, and HEU.
- Physical protection: Every NCA requires that nuclear material supplied, or special fissile material (plutonium), produced under the NCAs satisfy a certain level of physical protection. Such a level is incorporated into either Convention on Physical Protection of Nuclear Material (CPPNM, INFCIRC/274) or the NSG Guidelines (INFCIRC/254). In addition, the US and Canada recommend non-supplier states to satisfy IAEA's Nuclear Security Recommendation on Physical Protection of Nuclear Material and Nuclear Facilities (INFCIRC/225).

As also shown in Table 2, among major nuclear suppliers, the US stipulates the most stringent non-proliferation conditions. Together with the fact the US has supplied nuclear material to various states under NCAs since the "Atoms for Peace" address in 1957, how to construct MNA, which enables to satisfy the US's nuclear non-proliferation conditions and obtain prior consent, especially for ENR is a key to ensure smooth supplies within MNAs.

Table 2. Comparison of requirements under NCAs between Japan and major nuclear supplier states.

	USA [3]	Canada [4]	Australia [5]	Russia [6]	UK [7]	France [8]
Safeguards	IAEA comprehensive Safeguards	IAEA comprehensive Safeguards	IAEA comprehensive Safeguards	IAEA comprehensive Safeguards	IAEA comprehensive Safeguards	IAEA comprehensive Safeguards
Uranium Enrichment	Prior consent necessary for enrichment over 20%	Prior consent necessary for enrichment over 20%	Prior consent necessary for enrichment over 20%	Prior consent necessary for enrichment over 20%	-	-
Reprocessing	Prior consent necessary*	Prior consent necessary*	Prior consent necessary*	Prior consent necessary	-	-
Alternation in form or content by irradiation	Prior consent necessary*	-	-	-	-	-
Storage of plutonium, uranium-233, HEU	Prior consent necessary*	Prior consent necessary	-	-	-	-
Cooperation on sensitive technologies	impossible	Possible	possible	impossible	-	possible
Re-transfer beyond the Jurisdiction	Prior consent necessary*	Prior consent necessary*	Prior consent necessary*	Prior consent necessary	Prior consent necessary	Prior consent necessary
Level of physical protection	• As a minimum, comparable to levels to set out in Annex B. (Categorization of nuclear material is the same as that of CPPNM**) • Implies to satisfy the recommendations contained in INFCIRC/225./Rev.1***	• Comparable to levels to set out in Annex A (Categorization of nuclear material is the same as that of Nuclear Suppliers Group (NSG) Guidelines) • All nuclear material in the facilities involved in reprocessing and storage and use of plutonium as well as transportation of nuclear material: INFCIRC/254 (NSG Guidelines)	• Comparable to levels to set out in Annex B (Categorization of nuclear material is the same as that of NSG Guidelines) • Desirable to satisfy the recommendations contained in INFCIRC/225./Rev.1	• As a minimum, comparable to levels to set out in Annex C. (Categorization of nuclear material is the same as that of CPPNM) • In case of international transportation of nuclear material, the CPPNM is ensured to be observed.	As a minimum, comparable to levels to set out in Annex B. (Categorization of nuclear material is the same as that of CPPNM)	As a minimum, comparable to levels to set out in Annex A. (Categorization of nuclear material is the same as that of CPPNM)
Sanctions in the events of noncompliance and/or infringement of certain provisions within NCA	• Cease of further cooperation and termination of NCA • Required to return supplied materials or special fissile material	-	• Required to return supplied materials or special fissile material	• Cease of further cooperation and termination of NCA • Required to return supplied materials or special fissile material	• Cease of further cooperation and termination of NCA • Required to return supplied materials or special fissile material	• Required to return supplied materials or special fissile material

(1) *: A programmatic advance consent was granted -: not specifically mentioned in the agreement;
(2) **: CPPNM: Convention on Physical Protection of Nuclear Material (INFCIRC/274);
(3) ***: INFCIRC/225: Nuclear Security Recommendation on Physical Protection of Nuclear Material and Nuclear Facilities.

2.3. The US's Nuclear Non-Proliferation Conditions

Based on the US Atomic Energy Act (AEA) of 1954, as amended [9], the US has supplied its nuclear fuel and fuel cycle services under its NCAs with non-supplier states. The Section 123 of the US AEA [9] sets out following nine criteria which the state must commit when it enters into a nuclear cooperation agreement with the US:

- Safeguards
  - ✓ Safeguards on transferred nuclear material and equipment continue in perpetuity;
  - ✓ Full-scope IAEA safeguards are applied in non-nuclear weapon states.
- Non-proliferation commitment and sanction in case of infringement of such commitment
  - ✓ Nothing transferred is used for any nuclear explosive device or for any other military purpose; the United States has the right to demand the return of transferred nuclear materials and equipment, as well as any special nuclear material produced through their use, if the cooperating state detonates a nuclear explosive device or terminates or abrogates an IAEA safeguards agreement.
- Nuclear Security (Physical protection of nuclear material)
  - ✓ Physical security on nuclear material is maintained.
- Control of ENR and storage of plutonium and HEU
  - ✓ There is no ENR by the recipient state of transferred nuclear material or nuclear material produced with materials or facilities transferred pursuant to the agreement without prior approval;
  - ✓ Storage for transferred plutonium and HEU is approved in advance by the United States.
- Re-transfer

  There is no retransfer of material or classified data without U.S. consent.
- Others
  - ✓ Any material or facility produced or constructed through use of special nuclear technology transferred under the cooperation agreement is subject to all of the above requirements.

Those criteria, however, are minimum ones. Article 7 of the NCA between the US and the United Arab Emirates (UAE), signed in 2009 [10], contains the UAE's obligation neither to possess ENR facilities nor to engage in ENR activities in its territory. The Obama administration announced, in 2012, that it had adopted a case-by-case approach and it would not require forgoing ENR capabilities in every future agreement [11]. This case-by-case approach is an US's traditional approach and, for example, the US has granted programmatic advance consent to Japan, EURATOM, and Switzerland, for their plutonium utilization programs, while it has not granted it to the ROK. However, the UAE and ROK are rather exceptional cases due to political instability in connection with neighboring states, and in here, how the MNA minimally satisfies requirements prescribed in the Section 123 of the US AEA are analyzed [9].

Regarding prior consent and programmatic advanced consents, the US has already granted Japan the latter on transfer of irradiated nuclear material, reprocessing, alternation in form or content, and storage of plutonium, uranium-233, and HEU. Compared with prior consent, the programmatic advanced consent provides non-supplier states more flexibility, because in the latter case, non-supplier states just inform the supplier states of their engagements in such activities, rather than asking consent for their each engagement. Although the US AEA does not mention any criteria for granting its

programmatic advance consent, the NCA between Japan and Canada requires that reprocessing, storage, transfer, or retransfer would take place "within the framework of the description of the current and planned nuclear programm" [12], while the NCA between Japan and Australia requires that they would be made "within the delineated and recorded Japanese Nuclear Fuel Cycle Program" [5]. In this respect, in order to obtain programmatic advance consents from supplier states, spent fuel reprocessing and MOX storage services within MNAs should be consistent with MNA member states' plutonium utilization plans and not to have surplus plutonium in their territories.

2.4. The EURATOM's "Declaration of Common Policy" (INFCIRC/322)

Compared with the US AEA's nuclear non-proliferation conditions on nuclear fuel supplies, the EURATOM's conditions on transfers and retransfers of nuclear material, *etc.* among its member states are not so strictly regulated. The EURATOM's "Declaration of Common Policy" (INFCIRC/322) [13] prescribes transfers and retransfers of nuclear material, and installations and technology of sensitive nuclear activities or other installations created on the basis of such technologies, within its Member States. According to the Article 2.1.1 of the Policy [13], "Plutonium and uranium enriched to more than 20% will be transferred by the Member States upon receipt of a certificate from the consignee specifying the final destination, the quantities, the approximate date of delivery, the timetable for utilization, the form in which delivery is to take place and the allocation of the material to one or other of the following uses:

- Fuel supply for any power or research reactors in operation or under construction on the Member States' territory or under its jurisdiction;
- Fabrication on the territory of a Member State or under its jurisdiction for purpose of fuel supply to the reactors above;
- Research and development in any laboratory situated on the territory of Member State or under its jurisdiction or third-party State;
- Utilization in any other installation connected with an energy program or a research and development program".

And Article 2.1.3 of the Policy [13] mentioned that "plutonium and uranium enriched to more than 20% will not be retransferred to a third State without mutual agreement between the Member State that has separated the plutonium or enriched and the Member State desiring to effect the retransfer, without prejudice to any other rights or prior consent that may exist".

As mentioned in Article 2.1.1 of the Policy [13], one of EURATOM's unique characteristics is that transfers of plutonium and uranium enriched to more than 20% to EURATOM member states require only "certificates" from the consignees. Different from the US AEA's nuclear non-proliferation conditions, the Policy requires neither prior consents nor agreements from the member states that have separated the plutonium or enriched uranium.

2.5. A Case Study for Requirements for Prior Consents under NCAs

Figure 1 is a case study on the necessity for prior consent from supplier states under NCAs, although nuclear non-proliferation conditions vary according to two states concerned. In general, the more

states engage in the backend of nuclear fuel cycle, the more they are anticipated to be required to have prior consent from various supplier states.

Figure 1. A case study of the necessity for prior consents from supplier states.

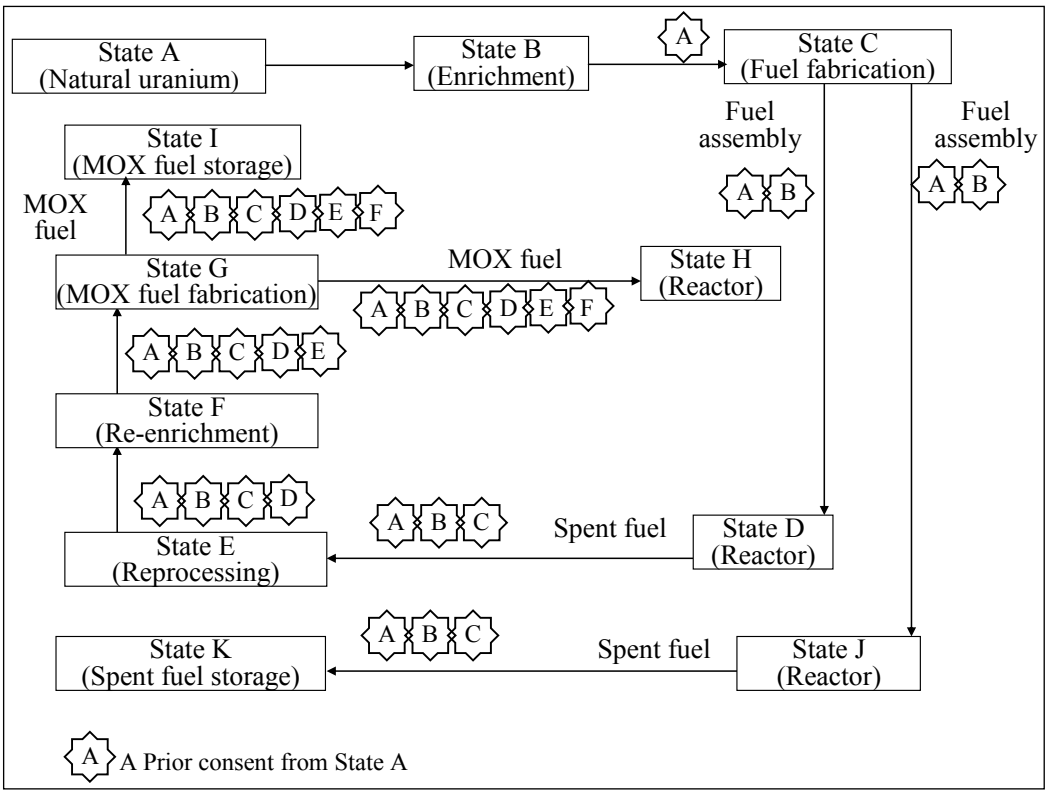

In Figure 1, when transferring fuel assembly from State C to State D, prior consent from A and B may need to be granted, based on NCAs between State C and States A and B. On the other hand, when transferring MOX fuel from State G to State I, prior consent from A, B, C, D, E, and F may need to be granted, based on NCAs between States G and States A, B, C, D, E, and F. In this case, if one State refuses to grant a prior consent, MOX fuel cannot be transferred to State G.

Assuming a MNA framework is established in the Asian region, there are multiple reactor states such as State D, G, and/or I, which have already concluded NCAs with various supplier states as described in the Table 1. Therefore, a number of prior consents are anticipated to be necessary and if it either fails to be granted necessary consents, or takes long time to be granted such consents, stable, and smooth and timely supplies of nuclear material and services cannot be ensured among MNA member states. In this respect, the MNA is inevitably required to have some internal arrangements, which enable either to avoid necessities or not to have any difficulties that each member state individually obtains prior consent from each supplier state under their individual NCAs.

3. Harmonization between NCAs with a MNA "Type I" and "Type II" Facility

3.1. A Nation-Based Facility, and Necessary NCAs and Prior Consents

Figure 2 shows an example of the number of necessary NCAs, when a nation-based reprocessing facility in State B reprocesses spent fuel from reactors in States C and D. Due to the facts that:

- Spent fuel was produced from nuclear reactors in States C and D;
- Nuclear fuel for reactors in States C and D was enriched by an enricher State A;
- Natural uranium from States E and F was enriched in an enrichment facility in State A, a total of 13 NCAs are required for spent fuel reprocessing by a nation-based reprocessing facility within State B. The State A is required to obtain two prior consents from States E and F when it supplies enriched uranium to States C and D, while the State B is required to obtain three prior consents from States A, E, and F, when it reprocesses spent fuel from reactors within States C and D.

Figure 2. Examples of necessary agreements in case of a nation-based facility.

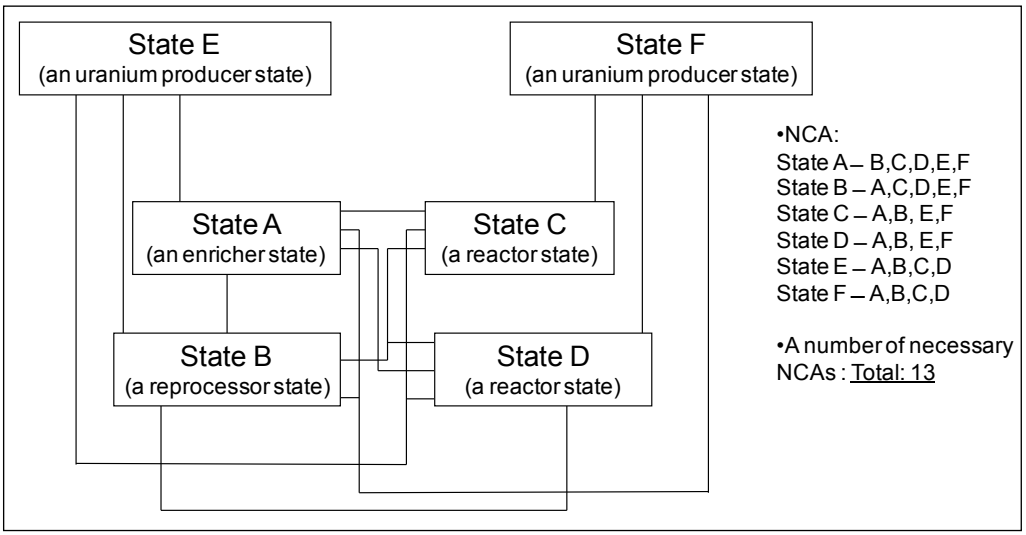

3.2. MNA "Type I" and "Type II" Facilities

As defined, MNA facilities can be categorized by both "Type I" and "Type II" facilities. The former is that one state and/or its enterprise exclusively operates a MNA facility, while the latter is that not only one state but all MNA member states and/or their enterprises jointly own and operate an MNA facility.

3.2.1. Necessary NCAs and Prior Consent in Case of a "Type II" MNA Facility

As the same status as an international organization such as EURATOM, if an MNA framework itself is recognized as one legal entity, representing its all member states, and concludes NCAs with other non-MNA/supplier states, every MNA member state is required neither to conclude NCAs with non-MNA member/supplier states nor to obtain prior consents to certain activities from them individually.

Figure 3 shows an example of the number of necessary NCAs when a MNA "Type II" reprocessing facility, hosted by State B, reprocesses spent fuel from reactors in States C and D. This case is different from the Figure 2, as States A, B, C, and D constitute a MNA framework by a MNA founding agreement and both State A and B host "Type II" MNA facilities. In the case of Figure 3, just two NCAs are required, specifically NCAs between the MNA and (1) State E and (2) State F, since such MNA represents all States A, B, C, and D through a MNA founding agreement. Furthermore, State B needs two prior consents from States E and F when it reprocesses spent fuel from reactors in States C and D. The more the number of necessary NCAs and prior consents from supplier states are reduced, the more stable, smooth, and timely, the supplies of nuclear material and services are expected among

MNA member states. Instead, as EURATOM, non-proliferation characteristics of each MNA member state has to be strengthened, which is enough to satisfy non-proliferation conditions within NCAs through a MNA founding agreement.

Figure 3. Examples of necessary agreements in case of MNA "Type II" facilities.

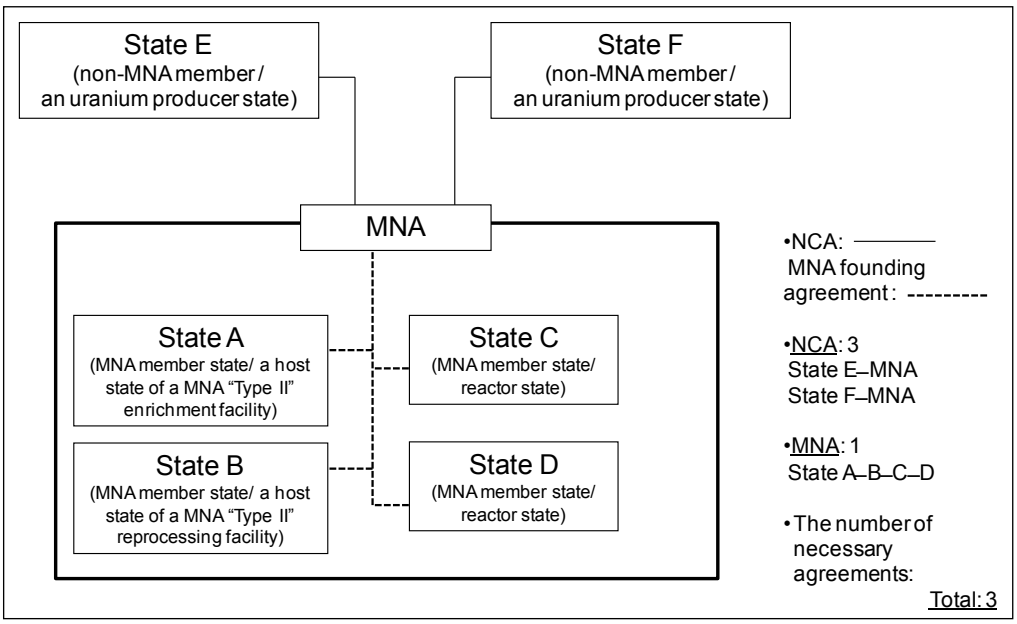

3.2.2. Necessary NCAs and Prior Consents in Case of a "Type I" Facility

It is reasonable to understand that above arrangements mentioned in Section 3.2.1 is not applicable when a MNA reprocessing facility is a "Type I" facility. It is because that such "Type I" facility is operated and its decision-making is done exclusively by a single state and/or its enterprise. In this respect, such a facility is the same as a "nation-based" facility in Figure 2.

On the other hand, this arrangement is contrastive to the fact that EURATOM has "Type I" an MNA facility of Eurodif within the EU territory. As mentioned in Section 2.4, plutonium transfers within EURATOM states is required only consignee's certificate of certain issues. However, compared with a newly establishing MNA framework in the Asian region, for example, EURATOM has following systems and an agency for ensuring nuclear non-proliferation:

- Regional system of safeguards: In order "to make certain that civil nuclear materials are not diverted to other (particularly military) purposes [14]", the EURATOM safeguards are implemented in conjunction with those of IAEA under tripartite agreements concluded between the member states, the EU (European Community, at that time), and the IAEA (INFCIRC/193).
- Regional system of accounting for and control (RSAC) of nuclear material: The EURATOM member states establish and maintain a common system of accounting for, and control of, nuclear material subject to safeguards agreement.
- EURATOM Supply Agency (ESA): The ESA was established in order "to ensure that all users in the EU receive a regular and equitable supply of ores and nuclear fuels [14]". In the event of infringement of EURATOM members' obligations, the European Commission may impose sanctions, including the total or partial withdrawal of source materials or special fissile

materials, as the ESA is able to exercise the right of ownership conferred upon it with respect to special fissile material.

- ENR facilities in EURATOM belong to either the UK or France of nuclear weapon states.

In addition, especially assuming an MNA framework, consisting of both nuclear energy developed and developing states in the Asian region, is to be established, each member state varies a great deal in status of nuclear energy utilization, non-proliferation, and nuclear security, therefore, it should be understood that a host state of "Type I" MNA facilities still individually needs to conclude NCAs with supplier states, and then to obtain prior consent from them for its activities.

Regarding transfers of nuclear materials within MNA member states, as shown in Figure 4, assuming:

- States A, B, C, D, E, F, and G constitute a MNA framework;
- States E and F are natural uranium supplier states;
- State A hosts MNA "Type I" enrichment facility, while State B hosts MNA "Type I" reprocessing facility.

As such, the MNA should be constructed that transfers of enriched uranium from State A to States C and D, transfers of spent fuel from States C and D to State B, and transfers of separated plutonium from States B to State G all require prior consent from States E and F, as the same case as if the States E and F are non-MNA members.

Figure 4. Examples of necessities of prior consents/agreements in case of MNA "Type I" facilities.

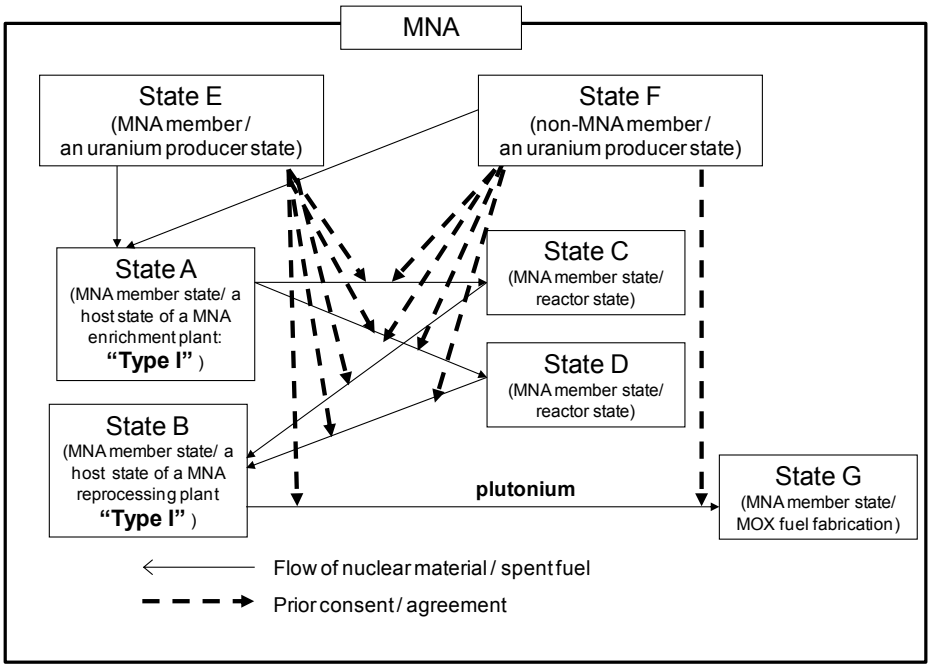

However, as it will be further explained in Section 4, through a MNA founding agreement, non-proliferation characteristics of the "Type I" MNA facilities is expected to be more strengthened than that of a nation-based facility, therefore, hurdles to obtain prior consents from States E and F for transfers of nuclear materials are not so high, compared with purely nation-based facilities.

In Figure 4, if MNA facilities hosted by States A and B are both "Type II" facilities, instead of "Type I" facilities, there is no need to obtain prior consents from States E and F, because that all MNA

member states jointly own and operate the MNA facility and every activity, including transfers and retransfers of nuclear material, already include prior consents of all MNA member states.

3.3. Short Summary

The harmonization between "Type I" and "Type II" MNA facilities and NCAs is summarized in following Table 3.

Table 3. Harmonization between "Type I" and "Type II" MNA facilities and NCAs.

MNA	Necessities of each MNA member state to conclude NCAs with non-MNA suppler states obtain prior consents from non-MNA suppler states for certain activities	Necessity of each member state to conclude NCAs with MNA suppler states obtain prior consents from MNA suppler states for certain activities
"Type I"	YES	YES
"Type II"	NO	NO

4. Necessary Factors of a MNA Founding Agreement in Relation to NCAs

Assuming states which have already concluded NCAs with supplier states including the US constitute an MNA framework, an MNA funding agreement described in Figure 3 need to include enough provisions which can satisfy non-proliferation conditions under the NCAs, especially the requirements by the Section 123 of the US AEA [9], if supplied material from the US is expected to be utilized within an MNA framework. Otherwise, whether the MNA facility is "Type I" or "Type II", smooth supplies within the MNA are to be prevented by, not to be granted prior consent or programmatic advanced consent from supplier states. Under such premise, necessary common factors in which an MNA founding agreement for both "Type I" and "Type II" facilities should include are analyzed in this section.

4.1. Safeguards

Whether states are MNA members or not, as far as they are non-weapon states under the NPT, their nuclear facilities are to be placed under the IAEA comprehensive safeguards agreement [INFCIRC/153 (corr.)]. In addition, in order to strengthen nuclear non-proliferation among MNA member states, it is desirable that ratification of the Additional Protocol [AP, INFCIRC/540(corr.)] is to be included in a MNA founding agreement, as a condition to join the MNA framework.

As to the regional safeguards and RSAC, the EURATOM system suggests that such regional safeguards and RSAC ensure additional layer of non-proliferation. From such perspectives, in addition to the MNA member states' implementations of comprehensive safeguards agreement, the regional safeguard system and RSAC should be established among MNA member states for the robust characteristics of the MNA.

Regarding "Type I" and "Type II" MNA facilities, the latter can ensure more facilities' transparency than the former, because in the latter, all MNA member states engage in nuclear material accounting as facility's operators, also engage in verifications of both safeguards and RSAC, as MNA inspectors. In this respect, such regional safeguards and RSAC in the "Type II" facility also contribute to enhance MNA member states' confidence building on nuclear non-proliferation, as it has been proven in the case of ABACC (Brazilian-Argentine Agency for Accounting and Control of Nuclear Material).

4.2. Nuclear Security

The NCAs commonly require non-supplier states to maintain certain level of physical protection of nuclear material, supplied and produce under the NCAs. Such levels are prescribed in IAEA Information Circulars (INFCIRCs) mentioned below:

- Convention on Physical Protection of Nuclear Material (CPPNM, INFCIRC/274);
- (Amended CPPNM, when it enters into force);
- Nuclear Security Recommendation on Physical Protection of Nuclear Material and Nuclear Facilities (INFCIRC/225);
- NSG Guidelines (INFCIRC/254).

In addition, there are the following documents on nuclear security, which could contribute to strengthen MNA nuclear security regime, if NMA member states comply with their provisions:

- IAEA Nuclear Security Series (Nuclear Security Fundamentals, Recommendations, Implementing Guides, Technical Guidance);
- Code of Conduct on the Safety and Security of Radioactive Sources;
- United Nations Security Council Resolutions 1373 and 1540;
- International Convention for the Suppression of Acts of Nuclear Terrorism.

The IAEA Nuclear Security Series "are consistent with, and complement, international nuclear security instruments [15]" including above three and Amended CPPNM.

4.3. Nuclear Safety

As with nuclear security, the NPT does not necessarily require any obligations on nuclear safety. But as premises for nuclear utilization, MNA member states need to satisfy adequate provisions in the following international conventions and recommendations:

- Convention on Early Notification of Nuclear Accident (INFCIRC/335);
- Convention on Assistance in the Case of a Nuclear Accident or Radiological Emergency (INFCIRC/336);
- Convention on Nuclear Safety (INFCIRC/449);
- Joint Convention on the Safety of Spent Fuel Management and on the Safety of Radioactive Waste Management (INFCIRC/546);
- IAEA Safety Standards Series (Fundamental, Safety Principles, Safety Requirements and Safety Guides).

4.4. Export Control: Non-Proliferation of ENR Facilities and Technologies, and Plutonium

Generally nuclear supplier states follow the Nuclear Suppliers Group (NSG) Guidelines (INFCIRC/254) for nuclear related exports, although supplier states do not necessarily have obligations to follow the Guidelines.

Regarding non-proliferation of ENR, originally the Guidelines simply stipulated supplier states' "restraint in the transfer of sensitive facilities, technology and material usable for nuclear weapons or other

nuclear explosive devices" (Paragraph 6 of INFCIRC/254/Rev.9/Part 1) [2], but the June 2011 revision to the NSG Guidelines (INFCIRC/254/Rev.11/Part 1) [16] sets out special criteria, which non-supplier states need to follow for ENR transfers, in the Paragraphs 6 and 7 of the revised Guidelines.

The Paragraph 6 (a) of the revised Guidelines [16] prescribes that "…suppliers should not authorize the transfer of enrichment and reprocessing facilities, and equipment and technology therefore if the recipient does not meet, at least, all of the following criteria" and listed following criteria:

- Is an NPT member states and full compliance with its obligations under the Treaty;
- Has not been identified in a report by the IAEA Secretariat which is under consideration by the IAEA Board of Governors, as being in breach of its obligations to comply with its safeguards agreement, nor continues to be the subject of Board of Governors decisions calling upon it to take additional steps to comply with its safeguards obligations or to build confidence in the peaceful nature of its nuclear programme, nor has been reported by the IAEA Secretariat as a state where the IAEA is currently unable to implement its safeguards agreement…
- Is adhering to the NSG Guidelines and has reported to the Security Council of the United Nations that it is implementing effective export controls as identified by Security Council Resolution 1540;
- Has concluded an inter-governmental agreement with the supplier including assurances regarding non-explosive use, effective safeguards in perpetuity, and retransfer;
- Has made a commitment to the supplier to apply mutually agreed standards of physical protection based on current international guidelines;
- Has committed to IAEA safety standards and adheres to accepted international safety conventions.

Those comprehensive criteria so-called "objective criteria" include not only safeguards and nuclear security provisions, but also nuclear safety and other export control provisions for ENR transfers. In addition, the Paragraph 7 (b) (2) of the revised Guidelines [16] indirectly implies that enrichment transfer should be executed only through "black box", wherein only the supplier can access and own the technology (Above Paragraph 7 (b) (2) does not expressly use a word of "black box", but "black box" was implied as "that do not permit or enable replication of the facilities").

Regarding ENR transfer, the authors understand that the above notion of Paragraph 6 (a) of the revised Guidelines could be interpreted that as far as recipient states satisfy above "objective criteria" and "black box" approach in case of enrichment transfer in Paragraph (7) (b) (2), ENR transfers to non-weapon sates should be authorized by supplier states. Although Paragraph 6 (b) of the revised Guidelines [16] prescribed so-called "subjective criteria" by noting "…6 (a)…should consult with potential recipients to ensure that enrichment and reprocessing facilities, equipment and technology are intended for peaceful purposes only; also taking into account at their national discretion, any relevant factors as may be applicable.", such subjectivity should not be frequently elaborated without expressing definite reasons, since Paragraph 6 (e) of the revised Guidelines [16] encourages participating in supplier involvement MNA as an alternative to national facilities, in case of ENR transfers. As far as, (1) the MNA itself maintains robust non-proliferation characteristics, (2) the recipient states are MNA members satisfying "objective criteria", and (3) enrichment technologies would be in form of black-boxed, the ENR transfers to non-weapon states should not be necessarily

prevented. Such consideration could also contribute to respect non-weapon states' "inalienable right" for the peaceful use of nuclear energy under NPT Article IV [17].

4.5. Other Consideration—the MNA Governance Structure on Nuclear Non-Proliferation

In addition to above 4.1 to 4.4 provisions, the MNA governance structure relevant to nuclear non-proliferation should be included in a MNA founding agreement for establishing a feasible MNA framework. Especially in "Type II" MNA facilities, the MNA, as a whole, needs robust nuclear non-proliferation characteristics for obtaining supplier states' prior consent and in this respect, EURATOM's ESA functions, mentioned in Section 3.2.2, serve as a useful reference. With the agreement of all members of the MNA framework, ownership of the material transferred or produced under the MNA framework is transferred to the MNA. Based on this fact, the MNA itself (or an organization within the MNA) can impose sanctions, including total or partial withdrawal of materials, in case of MNA members' abuse of MNA systems. If so, a very robust nuclear non-proliferation characteristic is expected to be maintained.

5. Conclusions

In this paper, authors clarify measures to institutionally harmonize between a MNA framework and NCAs, including necessary factors of a MNA founding agreement in relation to NCAs. If a MNA facility is a "Type II" facility, which is owned and operated jointly by all MNA member states, the MNA framework as a whole, like an international organization, concludes NCAs with other non-MNA member states and there is no need that each MNA member state individually obtains prior consent from non MNA member/supplier states for their certain activities. Even if the MNA facility is a "Type I" facility, obtaining prior consents from supplier states are expected not to be so difficult, due to MNA member states' robust nuclear non-proliferation characteristics, created through provisions on nuclear non-proliferation, nuclear security and safety, export control, and the MNA governance structure on nuclear non-proliferation in a MNA founding agreement.

In addition, a MNA founding agreement has the same function as integrated approaches to nuclear safety, security and safeguards (so called "3S-based nuclear energy infrastructure initiative" [18]) for enhancing those 3Ss as a whole. In this respect, the MNA framework can contribute to promote such an approach.

As a practical matter, in order to establish sustainable and feasible MNA, there are also various characteristics that MNA has to be equipped with, including structure and organization of an MNA framework, finance, economics, industrial operation, decision-making process, political responsibility, choice of host states of MNA facilities, liability, *etc.* In this context, the study is the very first step, and based on this study on harmonization between MNA and NCAs, the authors continue to further explore above other issues for the establishment of sustainable and feasible MNAs.

Acknowledgments

The authors would like to thank Dr. Mitsunori AKIBA for fruitful discussions on this issue. In addition, the Royal Society's "Fuel cycle stewardship in a nuclear renaissance" [19] was good reference when reviewing the paper.

A part of this study is the result of "Study on establishment and sustainable management of multi-national fuel cycle framework" carried out under the Strategic Promotion Program for Basic Nuclear Research by the Ministry of Education, Culture, Sports, Science and Technology of Japan.

Conflicts of Interest

The authors declare no conflict of interest.

References and Notes

1. Tazaki, M.; Kuno, Y. The contribution of Multilateral Nuclear Approaches (MNAs) to the sustainability of nuclear energy. *Sustainability* **2012**, *4*, 1755–1775.
2. IAEA. Guidelines for Nuclear Transfers (INFCIRC/254/Rev.9/Part 1). Available online: http://www.iaea.org/Publications/Documents/Infcircs/2007/infcirc254r9p1.pdf (accessed on 12 July 2013).
3. Agreement for Cooperation between the Government of Japan and the United States of America concerning Peaceful Uses of Nuclear Energy, signed on 4 November 1987.
4. Agreement between the Government of Japan and the Government of Canada for Cooperation in the Peaceful Uses of Nuclear Energy, signed on 2 July 1959. Protocol amending the Agreement was signed on 22 August 1980.
5. Agreement between the Government of Japan and the Government of Australia for Co-operation in the Peaceful Uses of Nuclear Energy, signed on 5 March 1982.
6. Agreement between the Government of Japan and the Government of the Russian Federation for Cooperation in the Peaceful Uses of Nuclear Energy, signed on 12 May 2009.
7. Agreement between the Government of Japan and the Government of the United Kingdom of Great Britain and Northern Ireland for Co-operation in the Peaceful Uses of Atomic Energy, singed on 25 February 1987.
8. Accord de Cooperation Entre le Gouvernement du Japon et le Gouvernement de la Republique Francaise pour l'Utilisation de l'Energie Nucleaire a des Fins Pacifiques, signed on 26 February 1972, Protocol amending the agreement was signed on 9 April 1990.
9. Atomic Energy Act of 1954, as Amended (P.L. 83–703). Available online: http://www.nrc.gov/reading-rm/doc-collections/nuregs/staff/sr0980/rev1/vol-1-sec-1.pdf (accessed on 12 July 2013)
10. Agreement for Cooperation between the Government of the United States and the Government of the United Arab Emirates. Available online: http://www.gpo.gov/fdsys/pkg/CDOC-111hdoc43/pdf/CDOC-111hdoc43.pdf (accessed on 12 July 2013).
11. Grossman, E.M. Administration Letter Promises "Case-by-Case" Approach to Nuclear Trade Deals. Available online: http://www.nti.org/gsn/article/administration-letter-promises-case-case-approach-nuclear-trade-deals/ (accessed on 12 July 2013).
12. Japan Atomic Industrial Forum, Inc. *Collections of International Conventions on Nuclear Energy* (In Japanese); Japan Atomic Industrial Forum, Inc.: Tokyo, Japan, 1993; pp. 357–363.
13. IAEA. Declaration of Common Policy (INFCIRC/322). Available online: http://www.iaea.org/Publications/Documents/Infcircs/Others/inf322.shtml (accessed on 12 July 2013).

14. Treaty establishing the European Atomic Energy Community (Euratom). Available online: http://europa.eu/legislation_summaries/institutional_affairs/treaties/treaties_euratom_en.htm (accessed on 12 July 2013).
15. IAEA. Nuclear Security Recommendations on Physical Protection of Nuclear Material and Nuclear Facilities (INFCIRC/225/Revision 5). Available online: http://www-pub.iaea.org/MTCD/publications/PDF/Pub1481_web.pdf (accessed on 12 July 2013).
16. IAEA. Guidelines for Nuclear Transfers (INFCIRC/254/Rev.11/Part 1). Available online: http://www.iaea.org/Publications/Documents/Infcircs/2012/infcirc254r11p1.pdf (accessed on 12 July 2013).
17. IAEA. Treaty on the Non-Proliferation of Nuclear Weapons (INFCIRC/140). Available online: http://www.iaea.org/Publications/Documents/Infcircs/Others/infcirc140.pdf (accessed on 12 July 2013).
18. G8 Hokkaido Toyako Summit Declaration. Available online: http://www.mofa.go.jp/policy/economy/summit/2008/doc/doc080714__en.html (accessed on 12 July 2013).
19. The Royal Society. Fuel cycle stewardship in a nuclear renaissance. Available online: http://royalsociety.org/uploadedFiles/Royal_Society_Content/policy/projects/nuclear-non-proliferation/FuelCycleStewardshipNuclearRenaissance.pdf (accessed on 12 July 2013).