sustainability

MDPI

Article

Green Technology Solution for Small-World Communication Using Plastic Optical Fiber (POF) and Light Emitting Diode (LED)—Design and Application

Mohammad Syuhaimi Ab-Rahman [1,*], Hadiguna Safnal [1], Iszan Hana Kaharudin [2] and I-Shyan Hwang [3]

[1] Department of Electrical and Electronic Engineering, Faculty of Engineering & Built Environment, Universiti Kebangsaan Malaysia, Bandar Baru Bangi 43600, Selangor, Malaysia
[2] Center of Liberal Studies, Universiti Kebangsaan Malaysia, Bangi 43600, Selangor, Malaysia
[3] Department of Computer Science and Engineering, Yuan-Ze University, Taoyuan 320315, Taiwan
* Correspondence: syuhaimi@ukm.edu.my

Abstract: Plastic optical fiber (POF) has become a dominant technology, with potential to be fully utilized in a small-world communication system because it has many advantages over existing systems. Among several high-speed solutions, POF can be considered as one of the most promising technologies because of its attractive features, such as efficiency, user friendly, environmentally friendly, low maintenance and economic metric, compared to silica fiber optics. POF devices are divided into several types based on fabrication techniques and continue to spread to a number of applications that have a high impact in the world of communication today. This paper will discuss the overall POF technology and sustainable solutions for small-world communication from device fabrication, device types, configurations and applications. Discussion will focus on the technologies that have been developed in our laboratory concerning a user-friendly approach, energy efficiency, ease of maintenance and high-performance solution. The performance of our optical splitter is comparable to commercialized devices that are less than 5 dB of insertion loss and 0.53 dB of excess loss. This sustainable solution in high-speed communication is the first reported up to this time.

Keywords: green solution; plastic optical fiber; optical devices; LED; clean fabrication

check for updates

Citation: Ab-Rahman, M.S.; Safnal, H.; Kaharudin, I.H.; Hwang, I.-S. Green Technology Solution for Small-World Communication Using Plastic Optical Fiber (POF) and Light Emitting Diode (LED)—Design and Application. *Sustainability* **2022**, *14*, 10894. https://doi.org/10.3390/su141710894

Academic Editors: Francisco J. G. Silva, Raul D.S.G. Campilho and Carla M.A. Pinto

Received: 24 June 2022
Accepted: 24 August 2022
Published: 31 August 2022

1. Introduction

Fiber to the Home (FTTH) and Fiber to the Desk (FTTD) are two common networks that have been evolved too fast towards providing many features, such as huge bandwidth, survivability, security, scalability, effective monitoring to support various application and future demand [1,2]. FTTD became promising when plastic optical fiber was invented to provide similar performance as silica fiber. POF provides numerous advantages to home builders, service providers, installers, content providers, home designers and consumers alike. With "garden hose" connectivity, POF is quick and easy to terminate, enabling it to be easily installed in the wall cavity, along baseboards, under carpets; due to its immunity to interference, it is even next to electrical cabling, making its installation quicker, more flexible and cost-effective than CAT5/CAT6. POF provides a much safer solution due to the use of a light emitting diode (LED) as a signal blinked carrier and offers lower cost in installation instead. Moreover, LED is small, low cost, multicolor, high intensity, consumes less energy, has ease of installation and can be modulated very quickly. Troubleshooting is quick and easy as POF uses an eye-safe visible range light. In fact, it is the only interconnect technology where the signal can be seen at both ends without the need for any safety gear (safety glass) or power meter.

Sustainable manufacturing or green manufacturing is a method for manufacturing that minimizes waste, chemical consumption and environmental impact. These goals are to be obtained mainly by adopting practices that will influence the product design, process

design and operational principles [3]. Therefore, sustainable manufacturing may be defined as a system that integrates product and process design issues with issues of manufacturing, planning and control, in such a manner as to identify, quantify, assess and manage the flow of environmental waste, with the goal of ultimately reducing the environmental impact to that of the self-recovery capability that the Earth could deal with, while also trying to maximize resource efficiency. Sustainability is not a trend that will pass, but rather a vision for a low-carbon, low-waste future and, inevitably, green manufacturing plays a crucial role in reaching that [4].

POF communication is a sustainable solution for customer access networks and small-world networks. POF is an established medium in industrial, automobile and home networks due to its high reliability in even the most rugged environments [5,6]. With data rates of up to a few Gigabits and assured quality of service to every device in the residence, POF is the most robust technology for 100 Mbps Optical Ethernet and video transmission in the home [7]. These features of POF are especially advantageous for emerging IPTV implementations and other triple-play services (data, video, audio). Because it is optical, polymer fiber is completely immune to electrical noise. That means existing copper wiring or existing networks, such as wireless systems, in the house cannot interfere with data passing through the POF cable, but in certain applications, both technologies are integrated, for example, underwater wireless-to-plastic optical fiber communication systems [8–10]. This is very important for multimedia data transmission, in which the quality of the signal could be negatively impacted by external noise. Meanwhile, the introduction of WDM-POF increased the speed more than 1 GHz, depending upon number of LEDs to carry information for the bandwidth demanded application [11]. The quality of LED, driver circuit and configuration are important criteria in expanding the bandwidth of the network system. Thus, it will be the new era of optical systems where they can be installed very close to the customer end, or what we call near-user technology.

Since POF has more demand and is a new trend for visible optical communication, there have been many technologies for designing and manufacturing POF-based optical splitters, including twisting and fusion, side polishing, chemical etching, cutting and gluing, thermal deformation, molding, biconical body, circular block and reflective body [12–14]. Most of the previous methods proposed require chemical substances as a part of the fabrication process. This will lead to environmental pollution if not managed properly. POF provides a much safer solution due to the use of LED as signal blinked carrier and offers low cost in installation. Moreover, LEDs are small, consume less energy and can be modulated quickly [15]. Imagine, a 10 cent LED, which is commonly used as light indication in electronics appliances, can be used as an optical source to carry a huge bandwidth signal. Meanwhile, troubleshooting is also quick and easy as POF uses an eye-safe visible light. In fact, it is the only interconnect technology where the signal can be seen at both ends without need of any safety gear (safety glass) or power meter.

In this study, we introduce a sustainable solution by means of a Green Technology WDM Network, empowered by a user-friendly technique and high-performance optical devices to support its wide application to ensure the needy application can be obtained by customers. The novel chemical-free fabrication process requires simple apparatus and technique to fabricate the device, comparable to those on the market. The optical passive splitter is fabricated with a sustainable low-cost fused taper (LFT) technique to ensure each POF in bundle is all melted and fused perfectly, resulting in homogeneous/uniform splitting ratio and low attenuation. Basically, the term 'fusion' defines the act or procedure of liquefying or melting by the application of heat. The presentation starts with the material, fabrication process, device characterization and application highlight at the end of the session. Discussion will focus on the technologies that have been developed in our laboratory concerning user friendly-approach, energy efficiency, ease of maintenance and high-performance solution.

2. Materials

Polymethyl Methacrylate (PMMA)

In this study, we use multimode SI-POF type made of polymethyl methacrylate (PMMA) having a core diameter of 1 mm as PMMA is one of the most commonly used optical materials. POF can only provide acceptable attenuation in the visible spectrum from 350 nm up to 750 nm. The attenuation has its minimum about 85 dB/km at approximately 570 nm. This is due to its intrinsic absorption loss mainly contributed by carbon–hydrogen stretching vibration in PMMA core POF [16,17]. For this reason, POF can only be efficiently used for short-distance communication. The disadvantage of the larger core diameter is higher mode dispersion. The refractive index of core is 1.492 for step index POF. The refractive index of cladding is 1.412. Figure 1 shows the dimensions and properties of PMMA. The size of core is beyond the single-mode dimension to make it suitable for short-haul communication and easier for termination process; thus, it is suitable for in-house communication. With our approach the customers themselves can fabricate the device according to their requirement (number of ports) and this is significant for a remote area where the device is inaccessible [18]. The process of installation, maintenance, expansion and replacement can be performed by user himself without need for advanced training and expertise.

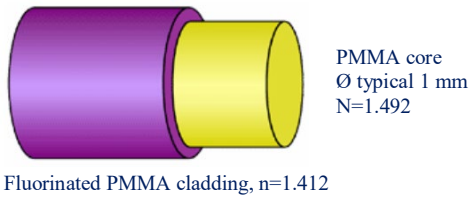

Figure 1. Scheme of a standard POF.

3. Fabrication Technique

3.1. Low-Cost Fused Taper (LFT)

The LFT technique is performed to refine twisting effects on fused-taper POF and to reduce the length of the fused-taper region. As a result, the size of the fabricated device becomes smaller, with less loss. In comparison to conventional fusion techniques, the LFT technique is simply implemented with handwork and uses practical apparatus, such as metal tube and candle, whereas the conventional fusion technique is practiced with a particular fabrication machine, resulting in high manufacturing cost. It is known that maximum temperature for melting POF is 80 °C [16]. Unlike silica fiber, POF needs to be kept away from high-temperature heating sources [17,19]. Otherwise, the core POF will be damaged due to excessive melting. For handwork fusion technique, we use a candle as an alternative for low-temperature heat exposure. By utilizing low-cost and practical apparatus, the fabrication cost can be reduced as well as the device cost.

For the purpose of practicing fabrication method, several processes have to be performed; POF bundle that consists of N number of POFs, inserted into metal tube and placed in symmetric position, is exposed to heat of candle flame indirectly, pulled and twisted throughout the heating process untill the fused-taper POF is formed [20]. Then, a POF cutter is used to slice at the center of the fused-taper POF that reaches the diameter of POF cable (excluding PVC jacket), approximately 1 mm. The cutting has to be conducted carefully to avoid micro-scale fraction inside the core, which may cause the scattering and increasing attenuation of fiber. For the final stage, completing the fabrication method, each multimode PMMA fiber port is insulated with a PVC jacket with 1 cm length. The fabrication method and configuration of POF in bundle arrangement are depicted in Figure 2. The characterization process will be further discussed in Section 4.1.

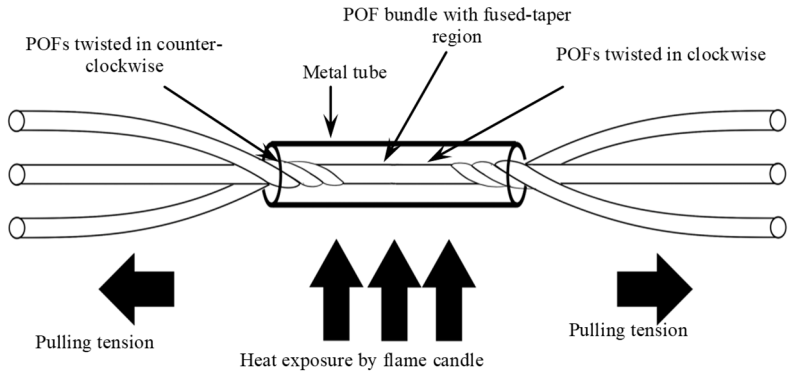

Figure 2. Fabrication method for low-cost fused-taper POF-based splitter.

We deem it fit to find an alternative fabrication technique to replace the existing one, which has a complex, sophisticated infrastructure and costly equipment. The technique should be well versed by the customer and can be easily fabricated with low-cost apparatus. We introduced a low-cost fused taper (LFT) as an interesting technique that can fulfill a criterion mentioned above. The 'DIY' concept-based solution is the first time reported where the user themself is authorized to fabricate the device according to their requirements. Additionally, the concept meets green manufacturing standards, as recommended by the international Sustainable Development Goals (SDG).

3.2. First Generation/Type 1 (G1)

Previously, the first types of LFT splitters were developed as novel passive splitter technology. The splitters, however, did not satisfy market specification in terms of performance and survivability, which they all perform with below expectation splitting efficiency and the fused-taper region is perishable. Our initial experiment shows the insertion loss is too high, which means the method needs to be improved further. To our knowledge, the result of high attenuation of splitter is mainly caused by a physical change in the core diameter and the length of POFs. According to our observation, the physical change occurs most certainly in the fused-taper region. Physically, this device features a long and thick fused-taper region. In addition, the existence of a twisting effect is seen clearly on the fused-taper POF and this shows that each POF in bundle is not fused and merged perfectly (Figure 3). In order to overcome these problems, we have to reduce the length of the fused-taper region and also refine the twisting effect on the fused-taper region, as depicted in Figure 4. Hence, there is a requirement for improvising the LFT technique to ensure that the second type of LFT splitter has good homogeneity/uniformity and higher power efficiency.

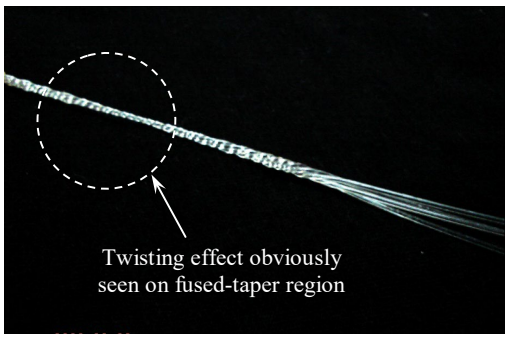

Figure 3. The first type of POF-based LFT splitter having long fuse-taper region; the twisting effect indicates that POFs are not melted and fused perfectly.

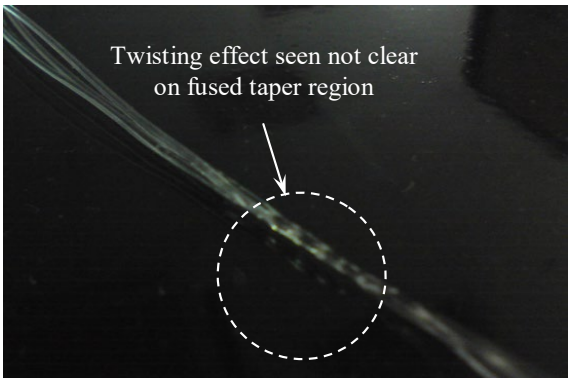

Figure 4. The second type of LFT splitter featuring short fused-taper region and twisting effect is not clear on POFs.

3.3. Second Generation/Type 2 (G2)

The second type of POF-based low-cost fused taper splitter is an improved and novel optical device that ends by N number of POFs, while the other side ends by a single port.

Similar to the other passive splitter, this device performs two functions: either signal coupling (from N to 1) or signal splitting (from 1 to N). The end of the splitter has only one POF port, fabricated in a fused-taper shape. In this region, N fibers fused and merged so that the optical light can propagate outward through N fiber outputs. Through the LFT technique, the diameter of the fused-taper POF cross-section decreased from 1.8 to 1 mm, reaching the diameter of POF cable, excluding the PVC jacket, so that the end of the fused-taper POF can be plugged into a PVC jacket and POF connector.

3.4. Comparison

The term 'type' in this paper purposely mentioned the improvement that was made to the splitter device. Type 1 (G1) and Type 2 (G2) generally used the same technique by means of LFT but some modification was made on the fused length in order to minimize the loss. However, Type 1 is still applicable and useful for small-world communication whose distance is not the most significant parameter, especially in very small areas of communication, such as in-vehicle applications (less than 20 m). Optical splitter G1 and G2 were fabricated, as shown in Figures 3 and 4. Table 1 shows the different specifications for LFT G1 and G2.

Table 1. The difference between the design specifications splitter 1 × 3 LFT first type (G1) and second type (G2).

Design Specification	Type 1 (G1)	Type 2 (G2)
Smallest diameter of tapered POF (cm)	1 ± 0.1 cm	1 ± 0.1 cm
Tapering length (cm)	4.5–6 cm	1.7–2 cm
Connector type	DNP	DNP
Length of fiber output (cm)	3–4 cm	1 ± 0.03 mm
Jacket type	PVC	PVC

Based on Figure 5, the design ensures that all POF fibers spun are easily fused and interconnected together. In addition, the design of the fused-tapered fiber has the smallest diameter of 1 mm and a length reaching tapering (over 3 cm) to facilitate the connection of input terminals into the connector on channel DNP Ø 1 mm. There are weaknesses in the design of the LFT splitter first type because its fiber imperfection is critical where the fiber taper is too long (reached 6 cm) and over segmented (resulting in doubling the loss of the bending L_N).

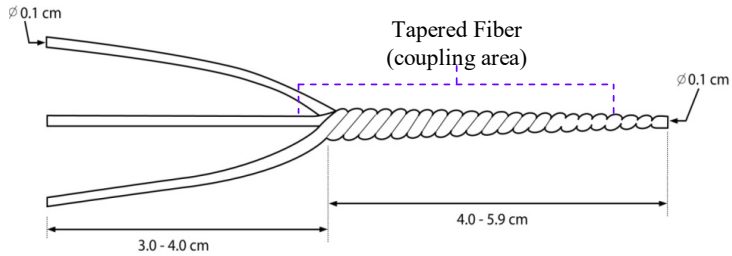

Figure 5. Design for splitter 1 × 3 LFT first type.

In this study, the main method to improve structural imperfections is to reduce the volume of the affected fiber structure imperfections. Taper length z and the diameter of the smallest POF ($a_0 = 2b_0$) are design parameters that affect the volume of a tapered fiber. As shown in Figure 6, the diameter of the smallest a_0 POF is set to achieve ~1 mm to match the diameter of the POF normal. This is important to prevent the loss of a connection between couplings through POF to POF. Therefore, there is no change in the diameter of the smallest POF a_0 and because the volume is reduced by reducing the length of imperfections, tapered z is referred to as Smalian equation (Equation (1)).

$$a = 2b \tag{1}$$

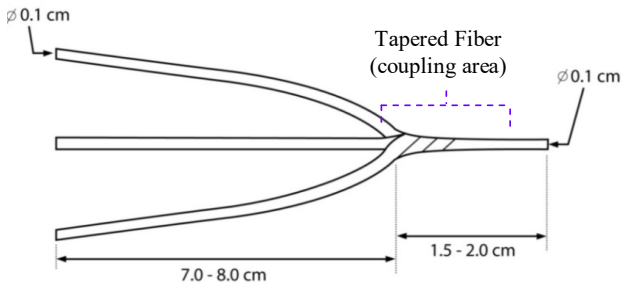

Figure 6. Design for splitter 1 × 3 LFT second type.

In addition, the fused-tapered fiber is designed so as not to obtain the effect twists along the surface to increase its fiber fusion or coupling, where all POF fully fused at high elasticity. This is important to standardize this part of the splitting ratio (%) in each output terminal (reaching 33.33%). This method is an important boost to equate Splitter uniformity ratio in each part of the output terminal.

For applications as WDM-POF coupler in a small-world communication, fiber taper with a high-fusion feature length allows multiplexing of different wavelengths (470, 520 and 650 nm) that can be made to produce a full spectrum (white) with the ratio of the signal optical against low noise (OSNR).

4. POF Devices

4.1. Splitter

The experimental investigations were carried out in order to characterize the performance for the second-generation LFT splitter. Three main parameters are observed, which are insertion loss, excess loss and splitting ratio. The relationship between attenuation and length of fused-taper region on the LFT splitter was also verified, in which the result is used to improve the power efficiency. Through improvised handwork fused-taper technology, each self-fabricated splitter is expected to have homogenous/uniform splitting ratio and better power efficiency compared to the first generation. In terms of optical loss and splitting ratio, a few analytical comparisons were made to examine whether the result indicates improvements in the LFT splitter.

In characterization tests, seven samples of the second-generation fused-taper splitter were tested (in the context of customers, they themselves fabricate the devices for home

network application). The main parameter, optical loss, was measured for each self-fabricated POF-based splitter. Some optical devices were used in the test, e.g., red LED optical transmitter with 650 nm and optical power meter. In this test, the possibilities of whether POFs are fused were also been inspected. At a side with the fused-taper region, the only POF port is selected as input and injected with 0.0 dB red LED transmitter, while in each of the three output ports at the other side, it is observed whether each port emit red light. All POFs in bundle are considered fused properly if each output port emits red light simultaneously.

In order to investigate whether the second-generation LFT splitters exhibit improvements, a characterization test is conducted for the first- and second-generation fused-taper splitters. In addition, the test was also performed for the commercial splitter in order to examine whether the performance of the second-generation splitters suit the market specification. Parameters, such as insertion loss, excess loss, length-dependent attenuation of fused-taper POF and splitting ratio, were measured and analyzed for each splitter. In the characterization test, the only fused-taper POF is selected as input port while the other ports at a side having branches of POF are defined as output. Through the characterization test, an input port is injected with red LED while either output port is directed into power meter for the purpose of measuring optical loss in dB unit; then, a similar procedure is applied repeatedly to other output ports. A diagram of the loss measurement method is depicted in Figure 7.

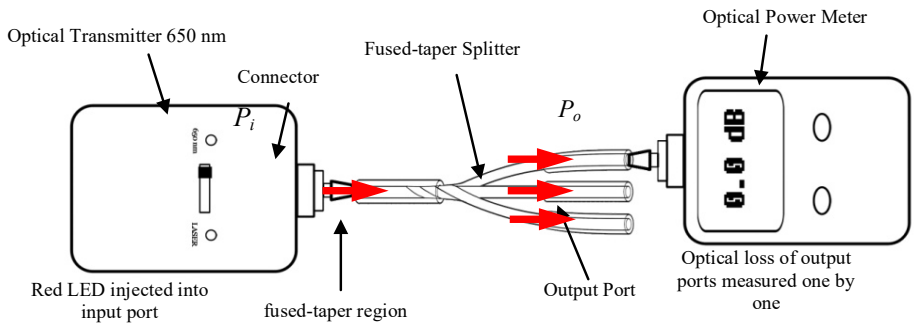

Figure 7. Optical loss measurement for low-cost fused-taper splitter.

In the region where the diameter of the POF cross-section decreases, approaching 1 mm, the fused-taper POF was successfully fabricated through an improvised fusion technique. In addition, it is observed that the twisting effect seems blurred on the fused-taper region, which shows that each POF in bundle was fused and merged properly. The length of this region was successfully reduced to 0.5–1.2 cm. When the only fused-taper port is injected with red LED transmitter, it is found that each output port emits high-intensity red light. This proves firmly that each POF in bundle arrangement is coupled perfectly. Furthermore, this means that no deformation occurred along the fused-taper POF and the prototype has the ability to couple optical signals. The result for the fabrication method is shown in Figure 8.

Figure 8 shows a comparison for insertion loss for type 1 (G1), type 2 (G2) and commercial splitters. In comparison, it is revealed that each output port of the first-generation splitter experiences high insertion loss, ranging from 10 dB to 18 dB with 16 dB of maximum average insertion loss, while the second-generation splitters have better splitting efficiency, with 7 dB of maximum average insertion loss. The second-type splitter, namely G2.5, performs with superb performance, as each output port experiences low insertion loss, which is below 5 dB. Averagely, the commercial splitters reach 6.8 dB of maximum insertion loss, which means that the second-generation splitters have similar performance as the commercial splitter.

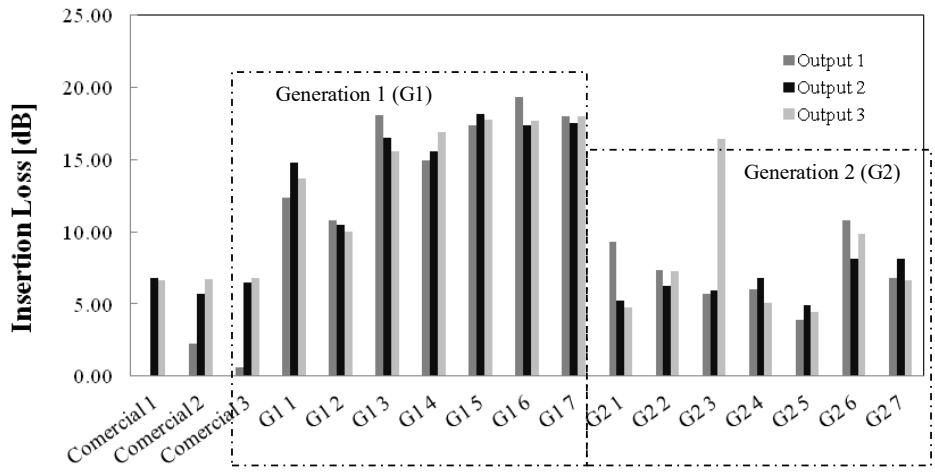

Figure 8. Comparison for the insertion loss of each output port for 7 samples of type 1 (G1) and type (G2) splitters and 3 samples of commercial splitters.

The error could happen during the fabrication process. Irregularities in controlled heat and exposing the POFs to the heating process become some of the major problems. This is because the lower melting point makes the core structure of POF more sensitive to the heating process. The analysis of the prototype characterization was carried out to investigate parameters, such as insertion loss, fused-taper length-dependent attenuation and splitting ratio. It is necessary for high-quality splitters and enables one to split the optical signal homogenously at lowest attenuation. The LFT splitters could perform splitting function properly, as shown in Figure 9.

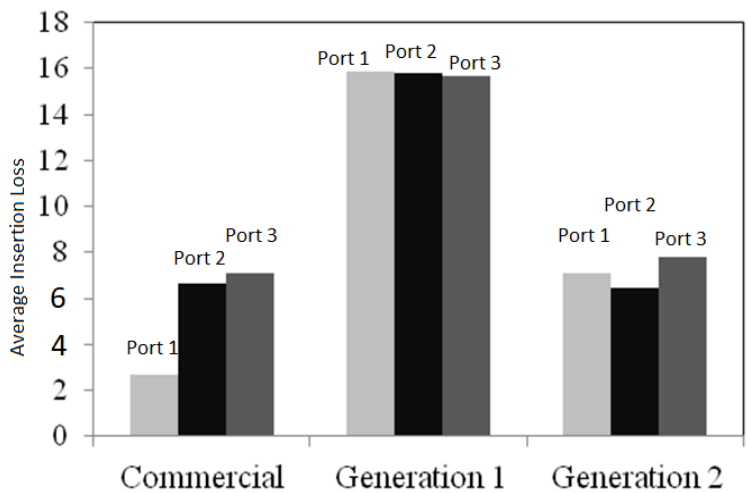

Figure 9. Comparison for the average insertion loss of each output port for generation 1, generation 2 and commercial splitters.

Splitting ratio is the parameter that has to be analyzed, as it determines the degree at which each POF is fused and coupled. Figure 9 presents a graph for splitting ratio of type 1 (G1), type 2 (G2) and commercial splitters. From the graph, it is revealed that commercial splitters have poor homogeneity, at a splitting ratio of 4:47:49%, whereas the second generation of fused-taper splitters has better homogeneity, in which the splitting ratio of each splitter is approximately 30% until 35% for each port. This excludes two samples of second-generation splitters, namely G2.1 and G2.3, which have bad homogeneity and splitting ratios of 48:27:25 and 20:21:59%, respectively. From the observation, it is believed that inhomogeneous splitting ratio for both splitters is due to the micro-scale crack that exists at the end of the fused-taper POF cross-section. The crack is the consequence of an

improper cutting method at the center of fused bi-conical POF bundle. The heat distribution in the fusion taper region plays a main role in determining the power distribution of the device. Additionally, the symmetrical position of POF fibers after fusion also led to the quality of power distribution and this can be achieved through the proper twisting process during fiber preparation.

This study is carried out with the motivation to reduce the length of the fused taper in order to improve the performance of the LFT splitter. Thus, the relationship between the attenuation and the length of the fused-taper POF was also characterized and analyzed. The length-dependent attenuation was plotted in a graph, as depicted in Figure 10. From the graph, the attenuation of the splitter is exponentially proportional to the length of the fused-taper POF. The relationship between the attenuation and length of the fused-taper POF can be expressed as $\alpha = 16.03 \times 10^{0.049L}$, where α and L denote attenuation and length of fused-taper POF, respectively. In comparison, it is revealed that the attenuation of the first-generation LFT splitters, having a long fused-taper region, is within a range of 24.1–30.8 dB, while the second-generation splitters, having short fused-taper POF, are afflicted with 16.7–19.62 dB attenuation. The result proves that the attenuation of first-generation splitters can be minimized by reducing the length of the fused-taper POF, the region where major physical changes occur on POFs in bundle.

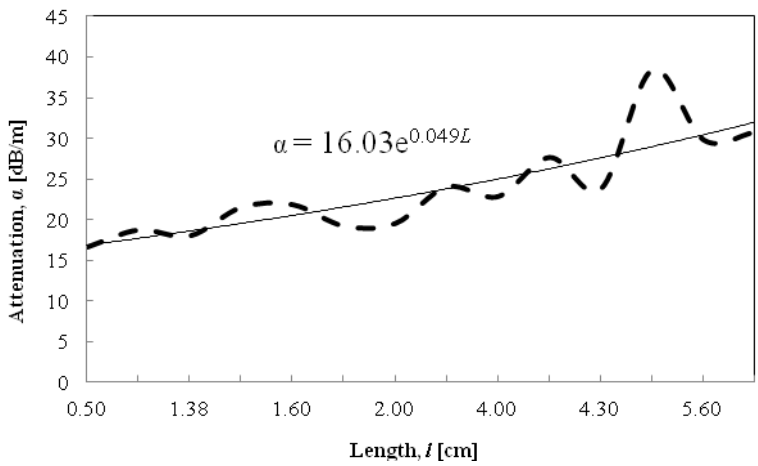

Figure 10. Relationship between attenuation and length of fused-taper region on low-cost fused-taper splitters.

Figure 11 shows a graph for excess loss of both types of fused-taper splitters. In comparison, the excess loss of first generation ranges from 5.56 dB to 17.58 dB, while second generation performs splitting operation at 4.58 dB of maximum excess loss and 0.53 dB of minimum excess loss. This shows that the excess loss for the second-generation splitter is lower than the first generation. The excess loss for the commercial splitter was also measured; its value was 0.39 dB. Many factors might affect the efficiency of the splitter, other than imperfect shape, fabrication failure and improper joining process; the presence of surrounding light could be one of the factors causing an error in optical power meter. Optical power meter is able to reach nano-watt external power. Hence, the disruption from an external source of light is ensured to be avoided during the power measurement conducted. In this study, the optical loss might be categorized as extrinsic loss due to the physical change in POF and LED projection to POF [16,21]. We discovered that the physical change in POF mostly occurs at the fused-taper region and this is caused by a fabrication process, in which the core diameter decreases, by approaching 1 mm, and each POF is twisted and fused under exposure to heat. In the characterization test, optical loss might occur through LED projection to POF surface. Thus, a low-loss connector is needed for connection between the optical transmitter and POF.

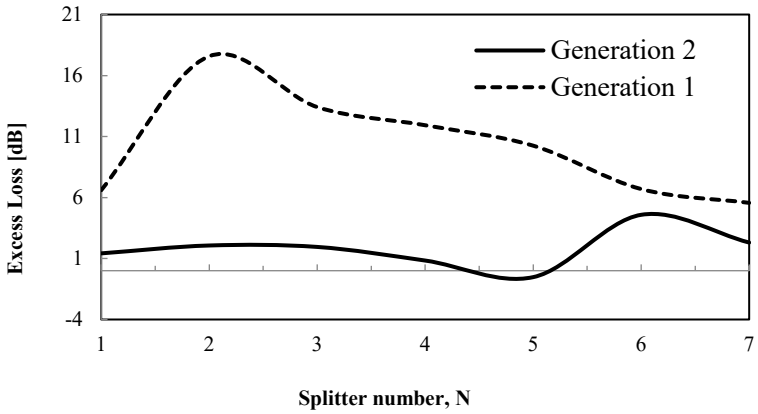

Figure 11. Comparison for excess loss of the first and second type of fused-taper splitters.

A handmade 1 × *N* optical splitter component was fabricated, in which *N* indicates a number of output channels enabling the splitter to separate a well-distributed power transmission through all fibers. The POF-based splitter includes an optical fiber bundle with its center being tapered and twisted under exposure to indirect heat, covered by a metal sleeve. This fusion technique produces a fused-tapered region in the center, which has the same size as one single fiber (diameter approaches 1 mm). Final analysis shows the average efficiency of the splitter was less than 80%, with excess loss less than 8 dB and uniformity not more than 3 dB between one output port and another. It is obtained that some variation has an influence on the efficiency of WDM-POF systems, such as distance of transmitter to receiver, LED color sources, color filters, filter to splitter distance, filter to receiver distance and number of output ports.

Figure 12 shows the packaged LFT optical splitter device for G1 (a) and G2 (b), respectively. Generation 2 has more attractive and much prettier housing and was modified to form a demultiplexer.

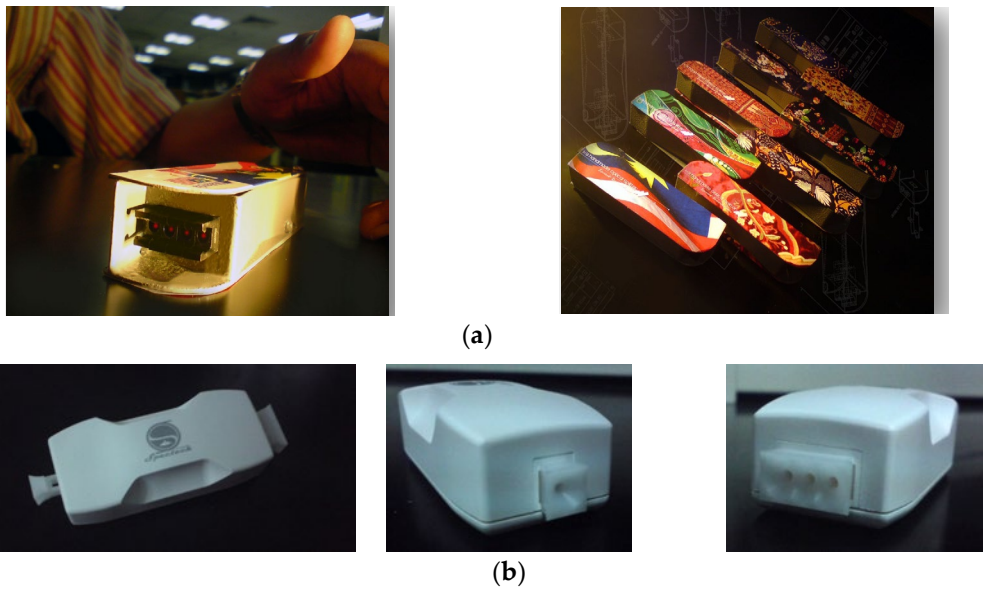

Figure 12. Multi-angle view of lab prototype: (**a**) the first-type N × N optical splitter prototype; (**b**) the second-type 1 × N optical splitter/demultiplexer prototype.

4.2. Demultiplexer

The handmade 1xN POF splitter is an optical device, which is ended by N number of POF ports, while the other side ends by one POF port. Like other typical splitters, it is also possible to work bidirectionally, in which it works from the N ports into one port (for

coupling signal purpose) or vice versa (for splitting signal purpose). As an example, an optical 1 × 4 splitter is developed by the joining of four PMMA POFs. In other specifications for the design, the input POF is designed and fabricated to have a fused-taper-twisted shape. This shape enables the coupling of four individual optical pulse inputs. Each input and output is connected with a POF connecter, as shown in Figure 13.

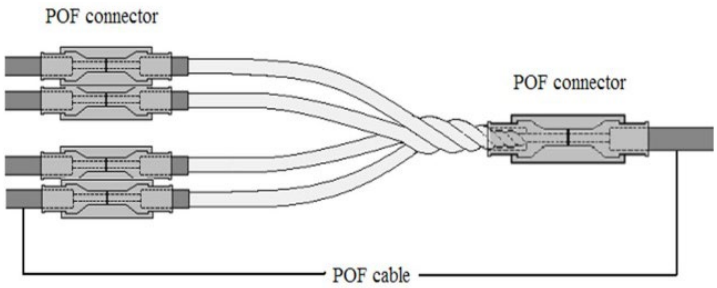

Figure 13. The design of the handmade 1 × 4 plastic optical fiber splitter.

The filter design, which is able to eliminate unwanted signal and select the wavelength of the system as desired, is shown in Figure 14.

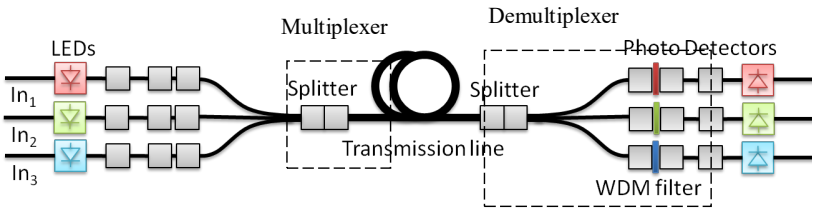

Figure 14. WDM-POF system design using low-cost splitter and filters. The splitter can also be used as multiplexer and combined splitter and filter can be performed as demultiplexer.

Uniformity is a measure of how evenly power is distributed between the output ports of the coupler. Uniformity applies to couplers with a nominally equal coupling ratio and is defined as the difference between the highest and lowest insertion loss between all of the coupler output ports, expressed in dB. Figure 15 shows the characterization of POF splitters that were made by machine and hand. The result shows that the commercial machine-made device has a good value in insertion loss but poor uniformity. As compared to our proposed device, both parameters, which are insertion loss and uniformity, are promising.

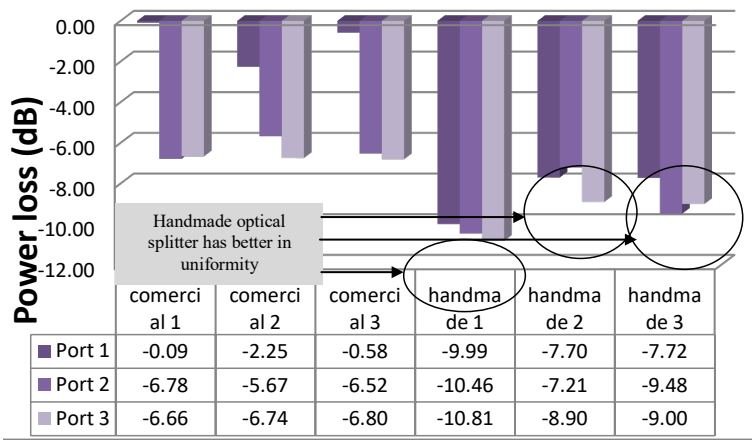

Figure 15. Two different fabrication techniques for optical splitter development. The machine-made device is good in insertion loss but the handmade device is better in uniformity and loss. Thus, it can be used for further fabrication of demultiplexer device.

The device with excellent uniformity can be extended to perform as a demultiplexer after joining together with a filter. Here, the filter is used at the end edge of the fiber and the color of the filter, technically, will determine the exact color of the signal passing through [7]. Figure 5 shows the two conditions of demultiplexer fabrication by using a uniform (a) and non-uniform (b) optical splitter. The demultiplexer based on a non-uniform optical splitter failed and could not perform as a demultiplexer. The details of this mechanism are shown in Figure 16. The signal extracted from the non-uniform splitter is different in amplitude of the signal.

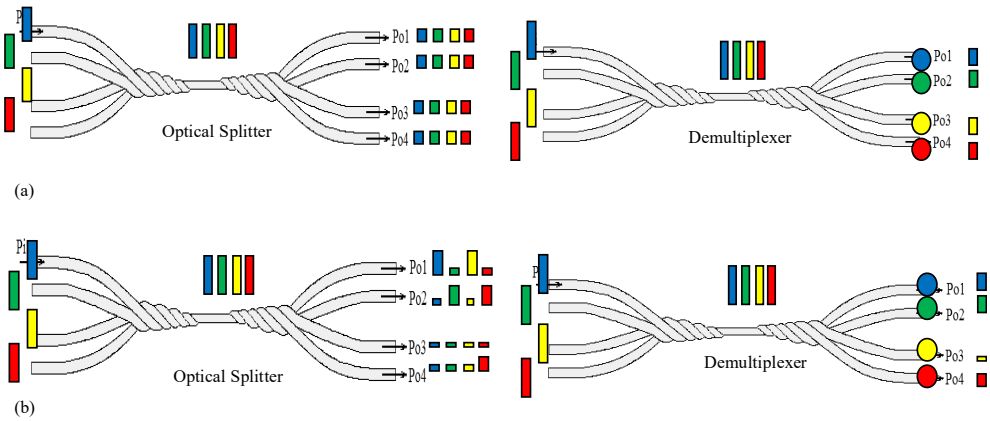

Figure 16. The transformation of optical splitter to the demultiplexer in two performance devices (**a**) uniform (**b**) not uniform.

5. Configuration

WDM-POF Network

The WDM-POF system was developed and successfully adapted in many useful applications, such as in-house surveillance systems and solutions for in-vehicle entertainment network applications, as an integration of POF network together with simple and inexpensive embedded system. Different colors generated by light emitting diode (LED) from transmitter-end indicates a different system, such as LAN network, video transmission network and broadcasting network, which also indicates different wavelengths for transmitting an optical signal over the WDM-POF system [22]. A color-transparent filter located at the splitter end was utilized to ensure that the WDM-POF system filters a color as desired, for further processes at the receiver end. Performance parameters for this splitter, including excess loss, insertion loss, output power and channel cross-talk, were measured. Characterization of the splitters was analyzed by injection of red, green and blue LED into the splitter. The proposed fabrication process for a handmade splitter and WDM-POF system are simple, easy, cost effective and suitable to be used for short-haul communication applications, with a distance range of 100 to 300 m.

Standard communication over POF uses only one single channel. To increase bandwidth for this technology, the only possibility is to increase the data rate, which lowers the signal-to-noise ratio and, therefore, can only be improved in small limitations. A low-cost WDM-POF network can be achieved when the LFT splitter is combined with a Rosculux Filter. DVD, CCTV and Ethernet signals are transmitted on a single strand of fiber, as shown in Figure 17. Two optical wavelengths (520 and 660 nm) are combined and sent in one direction, while the other signal (470 nm) is from another direction.

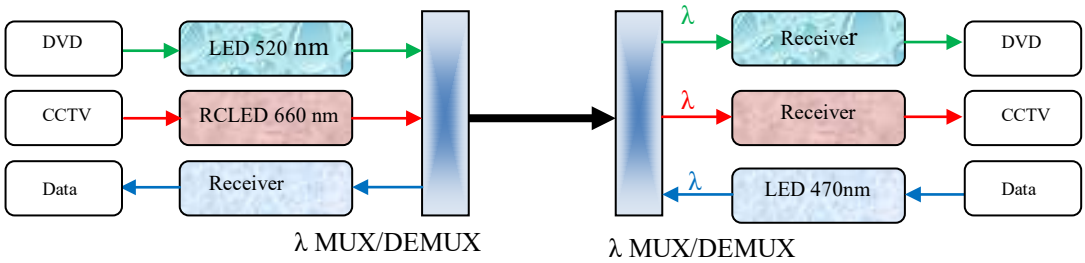

Figure 17. Design of 3-channel WDM-POF system with low-cost solution.

The specifications of the three-channel WDM system that was developed are as follows:

1. Fiber type: 950 µm PMMA SI-POF.
2. Length: 10–45 m.
3. Transmission Rate: 1 × analog video, DVD signal (2.8 Mbit/s); 200 Mbps Ethernet signal; and 100 Mbit/s.
4. Transmitter: 520 nm LED; 660 nm RCLED; & 470 nm LED.
5. Receiver: Analog video *Luceat* 950 µm with BNC; *DiMoto* DM-USB connector; *DieMount* Optospider POF (simpleks) without connector.
6. Demultiplexer: 1 × 3 LFT Splitter with *Roscolux* filter (3 wavelengths) Green (#89: *Moss Green*).
7. Red (#4690: *CalColor 90 Red*); and Blue (#69: *Brilliant Blue*).

As practiced by the two-channel WDM-POF system, the three channel has an effect, in which the output power for each base is also declined by data transmission distance. Figure 18 shows the attenuation of the three signals with transmission distance of 45 m. Green and red signals, transmitted simultaneously and mutually joined to one another, have a significant deviation between the two. What causes the red signal attenuation is the greatest reach of −45 dB. Red signal attenuation is also affected by crosstalk and SNR ratio by leakages of green signal. While the blue signal transmitted separately, the attenuation is not too large, i.e., close to the green signal attenuation. Deviation between green and blue signals is not more than 5 dB. SNR and crosstalk have little impact on internet data transmission signal over 470 nm wavelength. Figure 19 shows the test platform for the three-channel WDM-POF system.

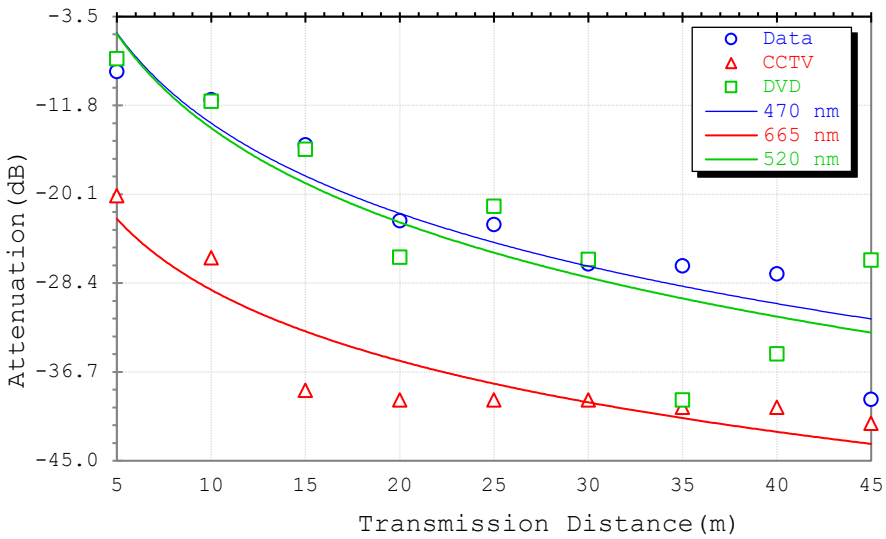

Figure 18. Attenuation profile over distance for 3-channel WDM-POF system.

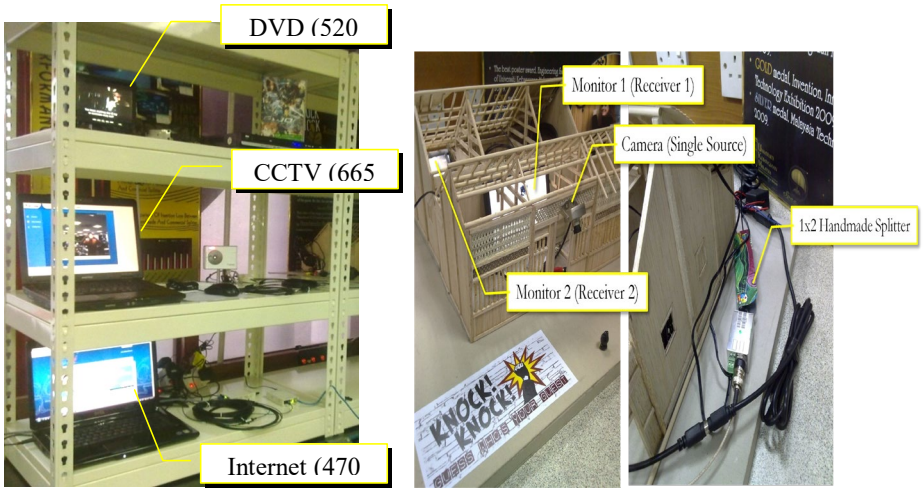

Figure 19. Test platform of 3-channel WDM-POF system.

6. Application

6.1. Home Networking over POF

Other fibers commonly used in home network applications, such as glass optical fiber (GOF), had no debate on the fact that the performance characteristics of GOF are far superior to those of POF, but glass tends to be expensive, both to acquire and install. Single LEDs are used in vast application today in communication systems due to the quality of the signal transferred. Figure 20 explains one of the home network applications, which is based on POF technology. The indoor POF network is connected with outdoor FTTH customer access network to provide huge bandwidth to the premises by reducing bottleneck [23]. Figure 21 shows the integration of application, such as Ethernet, CCTV, broadcasting and video gaming, over the WDM-POF network by means of three-LED signal modulation. Therefore, POF tends to be able to compete with other transmission media as a good solution due to the issues of fragility, cost and high bandwidth offered.

Studies on the characteristics of POFs tend to be one of the requirements for achieving the desired design, with some detail modification, and, of course, meet specification requirements of research. In this case, for the purposes of practical use of short-haul communication applications, POF-based technology can be applied to connect some nodes. In this study, as a preliminary work on the investigation of prototype characterization, it is carried out to design the end part of the fused-taper-twisted POF splitter. In prototype characterization, some experiments were conducted to determine optical output power, POF attenuation characteristics and power losses in the network.

The most powerful campaign of this handmade splitter is about integrating this device into closed-circuit television (CCTV) applications to split a video signal efficiently with a very low initial installment cost, which can now compete with a commercial CCTV system on the market. We can even significantly cut costs if we utilize this handmade device to split and supply a high-quality picture through a fiber. The solution can be achieved by two alternative approaches. The first is using a TDM scheme, where one wavelength carries many AV signals from video cameras; the second is using a WDM scheme, where one video camera is assigned with one specific wavelength/LED color. The network architecture of the system can be viewed in Figure 22. Figure 23 shows the video quality generated by the handmade optical splitter and single green LED only.

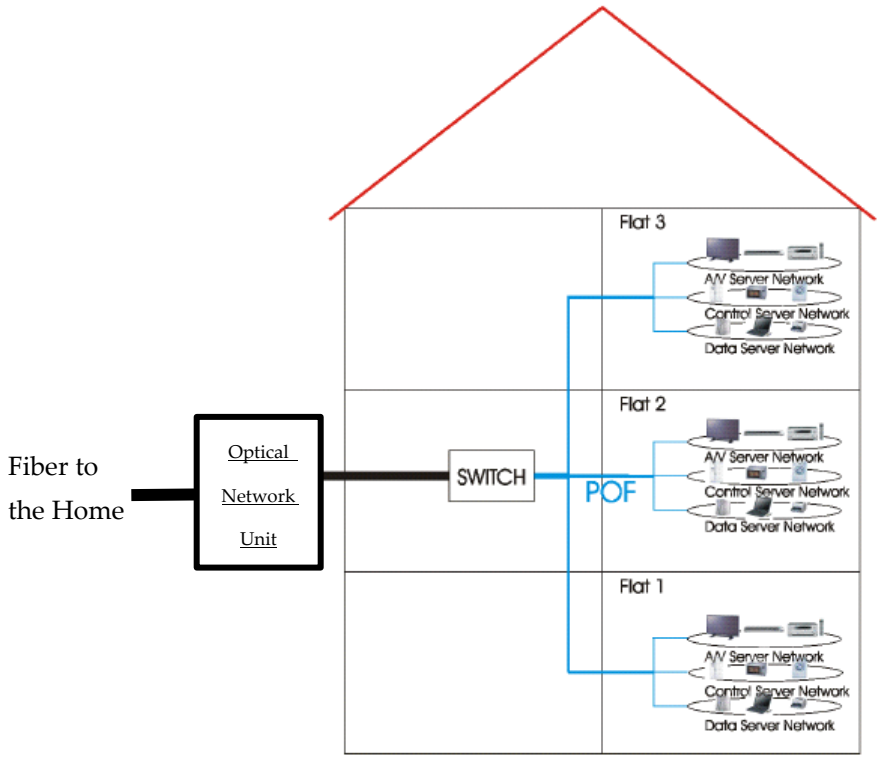

Figure 20. POF increases the application for use in household, gets rid of the bottleneck that occurs between the optical network unit and electronic appliances.

Figure 21. WDM-POF solution increased the bandwidth to facilitate many applications to the user end, such as Ethernet, broadcasting, surveillance and video gaming.

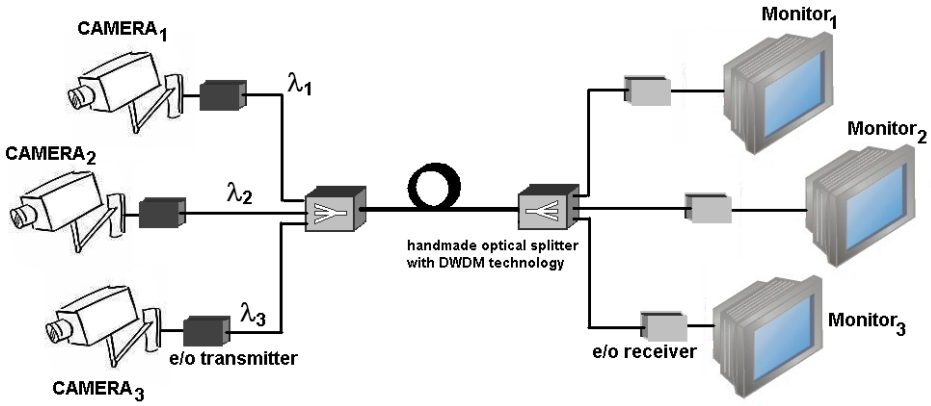

Figure 22. 1 × 3 POF-WDM system for low-cost CCTV network.

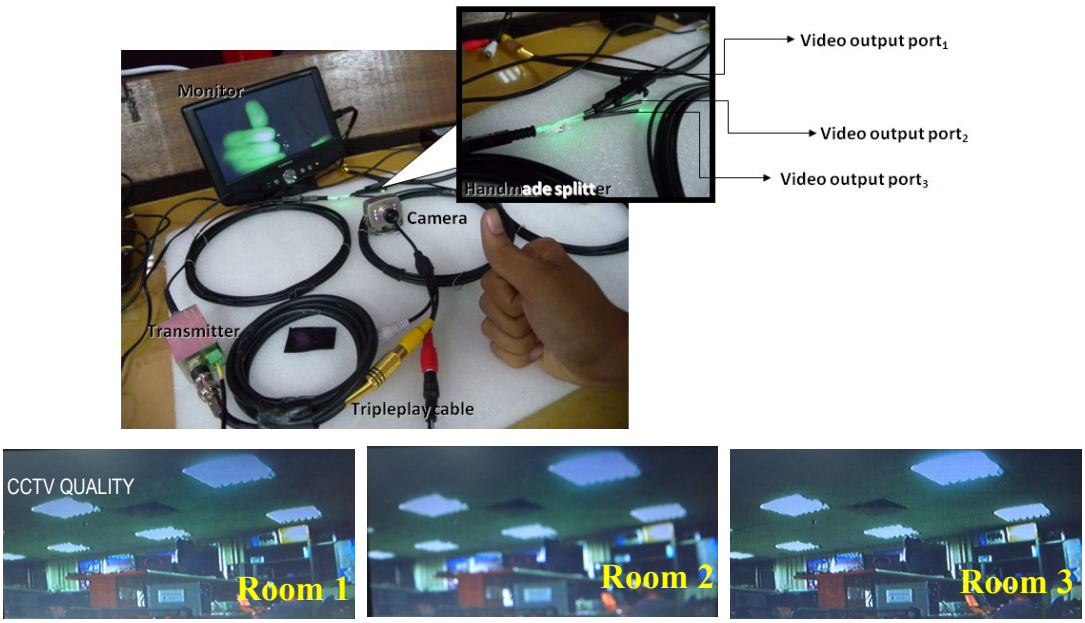

Figure 23. Video quality generated by handmade optical splitter.

6.2. In-Vehicle Network

One of the main goals for employing WDM over POF in the vehicle networking was reducing wire harness. Here, we utilize our fully developed prototype, fused splitters and the interference filters, three LEDs as a source, three photo detectors at the receiver end and low-cost filters to develop a whole system of WDM-POF for an in-vehicle entertainment network application system. The most important aspect that plays an important role in transmitting three different signals—represented by different colors on transmitter devices—is the filter, which is placed between the low-cost splitter and the receiver end. In this research, three different LEDs are utilized: red LED (650 nm) that transmits an internet line through LAN connection and green LED (520 nm) that delivers a high-quality video signal to be displayed on a monitor screen and blue LED (470 nm) represents audio signals distributed inside the vehicle, as shown in Figure 24.

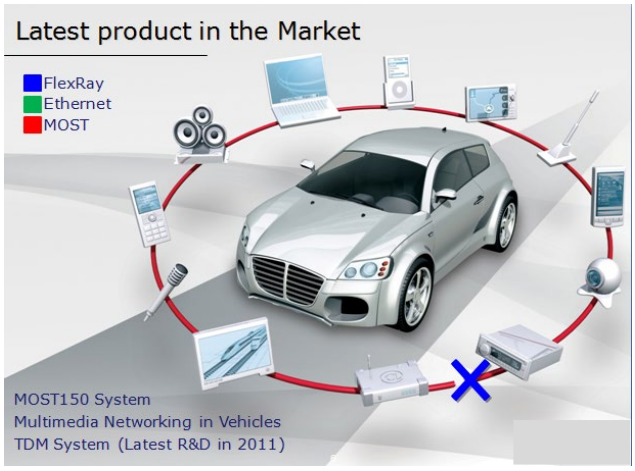

Figure 24. Eco-friendly WDM-POF networking seems to be the future technology for distributing the entertainment data with high speed and high-capacity solution.

The optical splitter is then applied in the automotive test bed to develop in-car infotainment. Two LEDs are used to perform intensity modulation with the internet data (red) and video signal (green), respectively. Our splitter has advanced to function as a demultiplexer that enables the multiplexed LED light to be separated and interpreted next. As a result, the capacity of the communication doubled (due to use of two LEDs) and more application can be embedded in the system. Figure 25 shows the result of LED WDM communication in the in-car application. The small diagram below shows the LED WDM communication configuration. Our proposed system is the lowest cost for a WDM system that is reported up to this time.

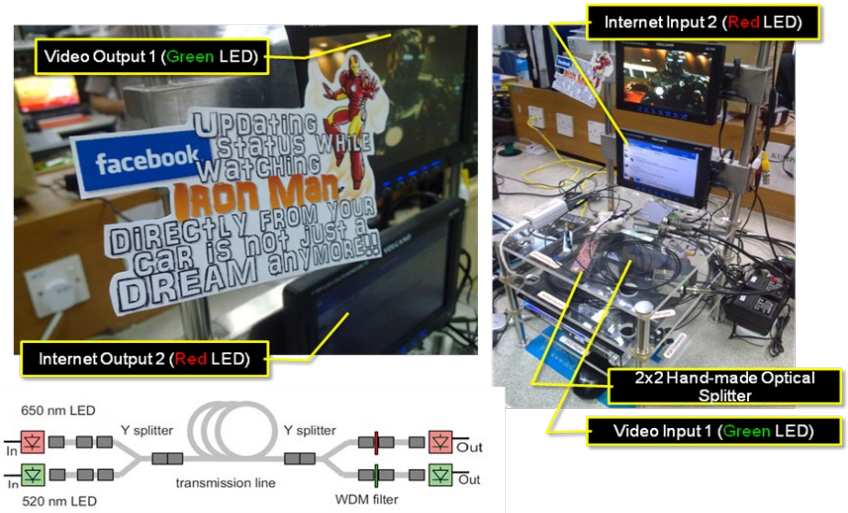

Figure 25. POF-based handmade optical splitter and demultiplexer play an important role in WDM communication in-car infotainment.

As discussed before, wires in the vehicle generally are responsible for transferring data and providing power load. Therefore, for changing any arrangement in wire lines along the body, both wire groups (data and power) must be modified as well [24]. Since the main advantage of using WDM in the vehicle network is increasing the transmission bandwidth and considerably reducing copper wires, the vehicle power distribution needs to be revised based on the data network model. Regarding this matter, in this paper, the star topology for power distribution layout is suggested. Figure 26 presents the suggested model based on using POF and WDM techniques in the cars' wiring system.

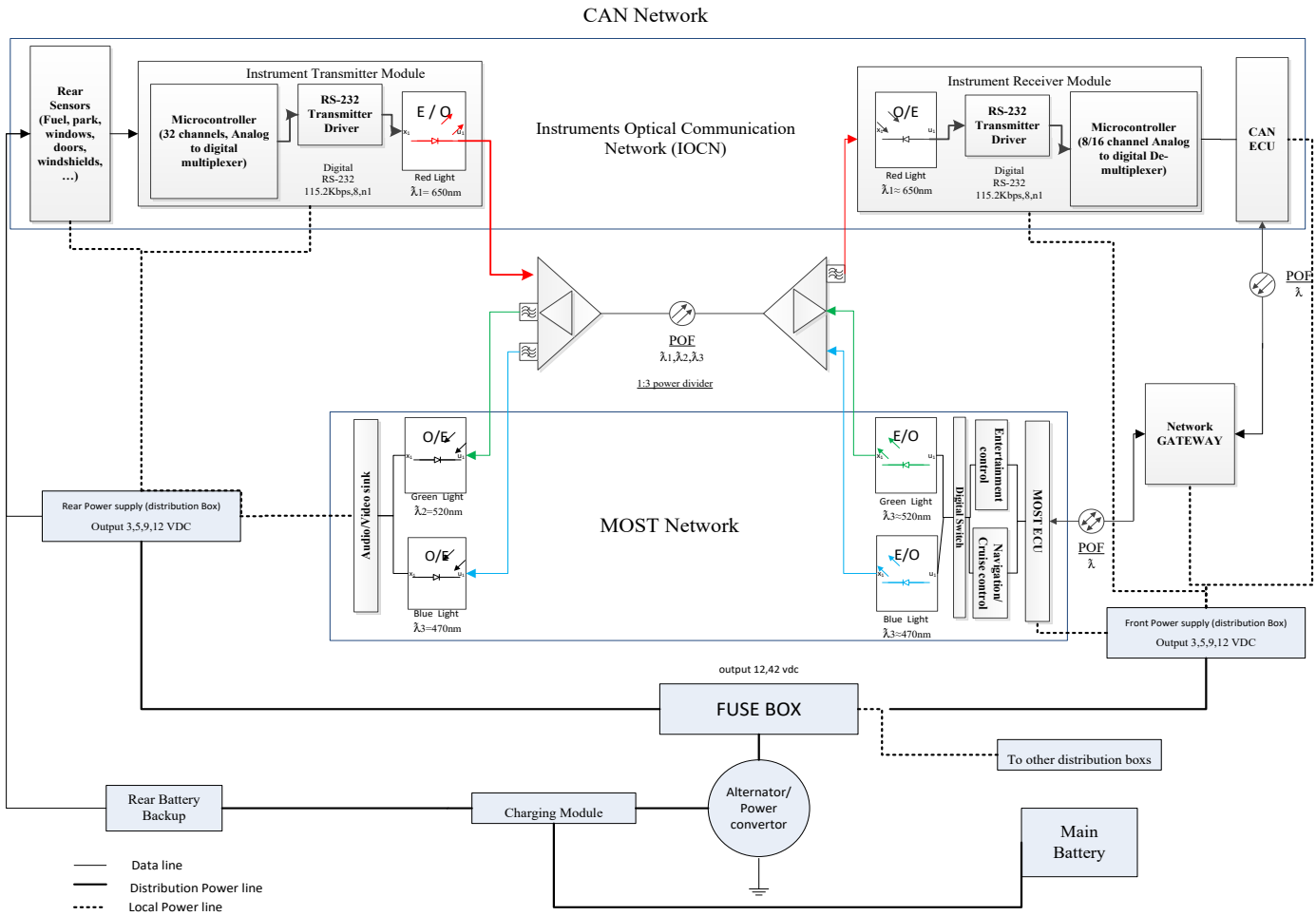

Figure 26. Suggested network model for POF WDM in-vehicle network system.

It is important to mention that most of the vehicle manufacturers (especially in automotive industry) considerably dedicate specific financial resources to the research and development of hybrid and fully electrical cars. Therefore, upgrading in-vehicle electronic and communication systems is the frontier of studies and innovations. On this point, the suggested model, which has considerable advantages for these manufactures, can be a matter of interest.

7. Discussion

We successfully developed a POF splitter that has vast application in small-world communication. The device can be installed in a polymer optical fiber in wavelength division multiplexing (POF-WDM). POF-WDM technology represents an attractive and sustainable solution to provide a high-bandwidth service from a small-world communication network. Our splitter is named *Green POF* for the purpose of commercialization. What makes this solution even more interesting is the ease of network testing, measuring, monitoring and finding the right track when fiber fault occurs. The *Green POF* splitter is devoted to covering emerging green and clean technologies over the optical network. The network presented is simple, inexpensive, sustainable and a promising technology for short-distance networks and suitable for home or networks in vehicles. This WDM technology, based on a *Green POF* splitter, enables data transmission in one POF channel to be multiplied and switched. Instead of relying only on silica or glass fiber, *Green POF* can now be used as an alternative to improve the network performance in short-distance communication systems. The measurement parameters obtained offer great outcomes. Three LED light source transmitters, transmitting visible light at wavelengths of 470, 520 and 660 nm for three data (video and

audio), are multiplexed into one POF and demultiplexed at the receiver end. The light signals were multiplexed and demultiplexed using fabricated etched optical fiber splitters. The multiplexed light signal wavelengths are deselected at the receivers using thin color film. Initial results of power measurements and performance of couplers are used to show the feasibility of this method.

8. Conclusions

The research reported a green solution to the POF fabrication process by means of a low-cost fused taper. Two devices were fabricated, which are optical splitter and demultiplexer. The experimental results showed both devices are comparable in terms of attenuation performance and can be used to form a WDM network. A WDM overall POF components network presented is simple, low cost and a very promising technology due to the numerous advantages of POF over currently available short-distance communication media. This network is suitable for the home, office and vehicle entertainment and security applications. The main contribution of this research is our POF splitter and method thereof. The fabrication technique is simple, user friendly and environmentally friendly. A sustainable solution for optical device fabrication and network set up was reported successfully.

Author Contributions: Conceptualization, H.S.; supervision, M.S.A.-R. and I.H.K.; review and editing, I.-S.H. All authors have read and agreed to the published version of the manuscript.

Funding: This research was funded by Universiti Kebangsaan Malaysia through Research-University grant (GUP-2021-021).

Institutional Review Board Statement: Not applicable.

Informed Consent Statement: Not applicable.

Data Availability Statement: Not applicable.

Acknowledgments: This research was conducted in the Broadband, Network & Security Laboratory, Universiti Kebangsaan Malaysia (UKM).

Conflicts of Interest: The authors declare no conflict of interest.

References

1. Liem, A.T.; Hwang, I.; Nikoukar, A.; Yang, C.Z.; Ab-Rahman, M.S.; Lu, C. Software-Defined Time-Shifted IPTV Architecture for Locality-Awareness TWDM-PON. *Opt. Int. J. Light Electron Opt.* **2020**, *207*, 164179.
2. Ganesan, E.; Hwang, I.; Liem, A.T.; Ab-Rahman, M.S. 5G-Enabled Tactile Internet Resource Provision via Software-Defined Optical Access Networks (SDOANs). *Photonics* **2021**, *8*, 140. [CrossRef]
3. Posinasetti, N.R. Sustainable Manufacturing: Principles, Applications and Directions. Efficient Manufacturing. In Proceedings of the 28th National Convention of Production Engineers, Institution of Engineers, Jaipur, India, 21 May 2013; Volume 28.
4. Nagle, K. What Is Green Manufacturing, and Why Does It Matter? *Evocon*. 2022. Available online: https://evocon.com/articles/what-is-green-manufacturing-and-why-does-it-matter (accessed on 10 August 2022).
5. Ghillino, E.; Richards, D.; Mena, P.V.; Hyuga, S.; Nakai, M.; Kagami, M.; Robert Scarmozzino, S. Using system simulation to evaluate design choices for automotive ethernet over plastic optical fiber. In *Metro and Data Center Optical Networks and Short-Reach Links*; SPIE: San Francisco, CA, USA, 2018; Volume 10560, pp. 133–141.
6. Xiaofeng, S.; Zhongxin, W.; Yuan, Z.; Li, P.; Bo, H.; Zhengping, Z. Optimal Design of High-speed 650 nm Optical Fiber Communication System. In Proceedings of the 2019 IEEE International Conference on Power, Intelligent Computing and Systems (ICPICS), Shenyang, China, 12–14 July 2019; pp. 185–188.
7. Ab-Rahman, M.S.; Supian, L.S.; Safnal, H.G.; Harun, M.H.; Jumari, K. OSNR Performance on Hand-Made Demultiplexer Using Thin-Film Filter And Splitter In Wdm-Pof Network Design For Short-Haul Communication System Applications. *J. Appl. Sci. Res.* **2012**, *8*, 1186–1190.
8. Ali, A.; Zhang, C.; Hassnain, S.A.; Lyu, W.; Tehseen, R. Underwater Wireless-to-Plastic Optical Fiber Communication Systems with a Passive Front End. In Proceedings of the 2019 18th International Conference on Optical Communications and Networks (ICOCN), Huangshan, China, 5–8 August 2019; pp. 1–3. [CrossRef]
9. Mohammed, A.S.; Adnan, S.A.; Ali, M.A.A.; Al-Azzawi, W.K. Underwater wireless optical communications links: Perspectives, challenges and recent trends. *J. Opt. Commun.* **2022**. [CrossRef]

10. Ali, A.; Tehseen, R.; Mithilesh, M.K.; Hassnain, S.A.; Zhang, Z.; Zhang, C.; Mehdi, S.R.; Mahmood, A.; Xu, J. Blue Laser Diode-Based Remote Solid-State Lighting Using Plastic Optical Fiber and Phosphor Film for a Hazardous Environment. *ECS J. Solid State Sci. Technol.* **2021**, *10*, 016001. [CrossRef]
11. López, A.; Losada, M.Á.; Mateo, J. Simulation Framework for POF-Based Communication Systems. In Proceedings of the 17th International Conference on Transparent Optical Networks (ICTON), Budapest, Hungary, 5–9 July 2015; pp. 1–4. [CrossRef]
12. Ehsan, A.A.; Shaari, S.; Rahman, M.K.A. 1 X 2 Y-Branch Plastic Optical Fiber Waveguide. Coupler For Optical Access-Card System. In Proceedings of the Electromagnetics Research Symposium (PIERS), Beijing, China, 23–27 March 2009; pp. 1079–1082.
13. Ehsan, A.A.; Shaari, S.; Rahman, M.K.A. Design and fabrication of an acrylic-based 1 × 2 POF coupler using CNC Machining. In Proceedings of the International Conference on Semiconductor Electronics (ICSE 2008), Johar Bahru, Johar, Malaysia, 25–27 November 2008; IEEE: New York, NY, USA, 2008; pp. 340–344.
14. Ab-Rahman, M.S.; Guna, H.; Arsad, N. Effect of the Surface Roughness on Cross Sectional Properties of 1 × 3 Polymer Optical Fiber-based Splitter. *J. Phys. Conf. Ser.* **2021**, *1748*, 062008. [CrossRef]
15. Farshad, N.K.; Mohammad, S.A. Optimizing in-vehicle Multiplexed Network Using WDM Over POF. In *Applied Mechanics and Materials*; Trans Tech Publications Ltd.: Wollerau, Switzerland, 2014; Volume 663, pp. 675–681.
16. Zieamann, O.; Krauser, J.; Zamzow, P.E.; Daum, W. *POF Handbook: Optical Short Range Transmission Systems*, 2nd ed.; Springer: Berlin/Heidelberg, Germany, 2008.
17. Imoto, K.; Maeda, M.; Kunugiyama, H.; Shiota, T. New biconically Tapered Fiber Star Coupler Fabricated by Indirect heating Method. *J. Lightwave Technol.* **1987**, *5*, 694–699. [CrossRef]
18. Ab-Rahman, M.S.; Supian, L.S. Low Cost and Environmental Friendly Multimode Optical Coupler Fabrication using Circular Blocks Technique. *OPTIK* **2014**, *125*, 893–896. [CrossRef]
19. Liu, J.; Cheng, T.-H.; Yeo Y-k Wang, Y.; Xu, Z.; Wang, D. Fused Biconical Tapered Technique Based Light Beam Coupling Between a Single Mode Fiber and a High Nonlinearly Photonic Crystal Fiber. In Proceedings of the Optical Fiber Communication Conference and National Fiber Optic Engineers Conference, San Diego, CA, USA, 22–26 March 2009; IEEE: Piscataway, NJ, USA, 2009; pp. 1–3.
20. Ab-Rahman, M.S.; Supian, L.S.; Guna, H.; Mohammad, N.N.S.; Hwang, I.; Hipni, A. Fabrikasi Dan Pencirian Pencerai 3 × 3 Berasaskan Gentian Optik Polimer (POF) Dengan Teknik Pelakuran Berkos Rendah. *Sains Malays.* **2014**, *43*, 1743–1750.
21. Kuzyk, M.G. *Polymer Fiber Optics: Materials, Physics, and Applications*; CRC Press: Carlsbad, CA, USA, 2007.
22. Haupt, M.; Fischer, U. Design and development of a MUX/DEMUX element for WDM communication over SI-POF. In Proceedings of the Electronics System-Integration Technology Conference (ESTC 2008), London, UK, 1–4 September 2008; IEEE: New York, NY, USA, 2008; pp. 1257–1262.
23. Haupt, M.; Fischer, U.H.P. Design and Development of a Mux/Demux Element for WDM over POF. In Proceedings of the International Students and Young Scientists Workshop Photonics and Microsystems, Dresden, Germany, 8–10 July 2007.
24. Ab-Rahman, M.S.; Khamene, F.N.; Guna, H. New Concept For Reducing Wire-Harness And Implementing Advanced Facilities for Non-Luxury Vehicles Via Application of POF. *Appl. Mech. Mater.* **2012**, *165*, 98–103. [CrossRef]